Sirius

edition 2015

WELCOME TO FIRST CLASS

Sirius S.p.a., established in 1996, operates in the residential air ventilation and purification market sector, in particular it produc es cooker hoods for residential kitchens. Quality, innovation, professional competence, technology and design are rolled into one with a clear and dynamic commercial policy that has permitted rapid growth of the company, ensuring market penetration throughout the world.
Sirius has, in a short time, become a world leader in the sector of high quality decorative cooker hoods, encompassing a wide product range and exporting 90% of its production.
The strategic choices accomplished in the technical productivity sectors, dictated by many years of experience, have been of fundamental importance for the growth and success of the company. The wide range of products, the different technological possibilities and innovation, the functionality of the components used, such as the motors and the different ventilation components, represent a combination between design and functionality. This gives the clients a wide choice to meet all of their ventilation needs. Our company's philosophy, innovative in the residential kitchen ventilation market, aims to mantain and improve the high quality standards of our production in style, technology and design, synthesized by the realization of the modular and innovative ventilation systems.

Sirius

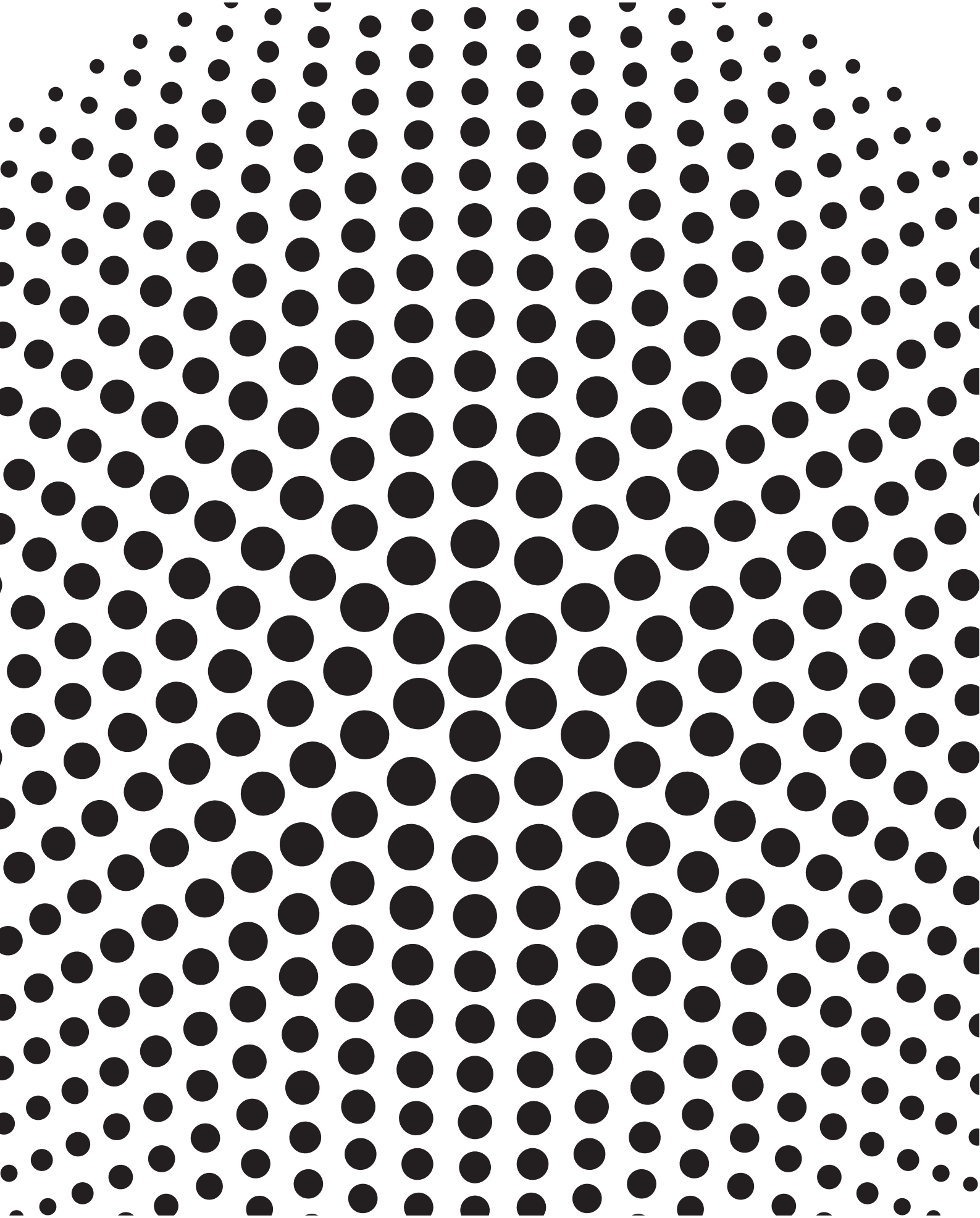

INDEX

DECORATIVE ISLAND

DERUTA SILT 26 p. 10
SILT 18 p. 14
SILT 18-L p. 15
SILT 21 p. 16
MO 406 p. 17
MO 404 p. 18
MO 405 p. 19
SIL 24 TC p. 20
SIL 24 p. 21
SIL 5 p. 22

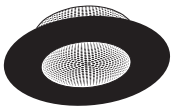

CEILING HOODS

RING SLT 962 p. 26
SLT 960 p. 30
SLT 963 p. 32
SLT 958 WHITE p. 34
SLT 958 p. 36
SLT 955 p. 38
SLT 956 p. 39
SLT 952 p. 42
SLT 953 p. 44
SLT 951 p. 46

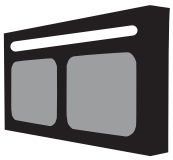

DOWNDRAFT

SMOOTH SDD12 p. 50
PUSH UP SDD11 p. 54
SDD8 TC p. 58
SDD2 L TC p. 60
SDD2 L INOX p. 62
SDD2 TC p. 64
SDD2 INOX p. 66
SDD4 TC p. 68
SDD3 TC p. 70
UP-RIGHT BUILT IN p. 72
UP-RIGHT TC p. 74

WALL HOODS

ECLIPSE SLTC 94	p. 78
TAKSIM SLTC 95	p. 82
HOOP SL 96	p. 86
SKINNY SLTC 93	p. 90
JEEG SLTC 97	p. 94
SLTR 75	p. 95
SLTC 75	p. 96
SLTC 74	p. 97
SL 91	p. 98
SL 90	p. 99
SLTC 85	p. 100
SLTC 87	p. 101
SLTC 86	p. 102
SL 88	p. 103
SLTC 92	p. 104
SL 92	p. 105
SLTC 81	p. 106
SL 89	p. 107
SL 50	p. 108
MO 207	p. 109
MO 208	p. 110
SL 22	p. 111
SL 26	p. 112
SL 31	p. 113

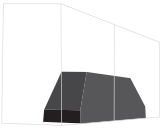

BUILT-IN PRODUCTS

SL 913	p. 116
SL 914	p. 117
SL 907	p. 118
SL 906	p. 119
SL 903	p. 120
SL - SLT - SM 900	p. 121
SM 905	p. 122
SL 909	p. 123

REMOTE MOTORS p. 124

ACCESSORIES p. 125

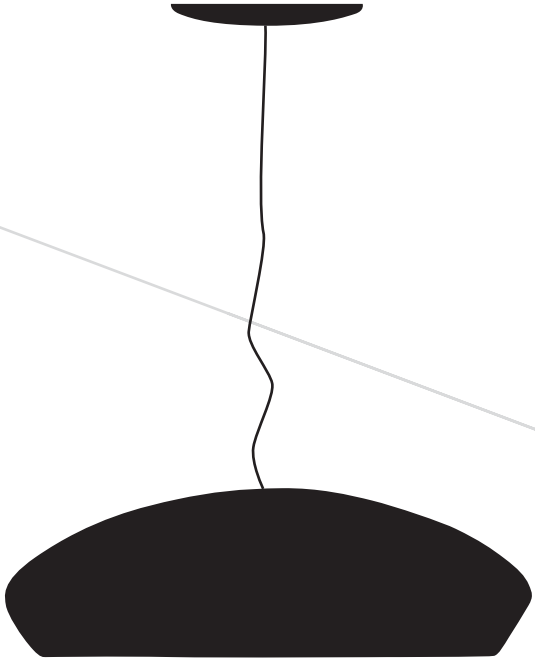

DECORATIVE ISLAND

DERUTA SILT 26
SILT 18
SILT 18 L
SILT 21
MO 406
MO 404
MO 405
SIL 24 TC
SIL 24
SIL 5

DERUTA SILT 26

design Giacomo Fava

handmade in Deruta

ceramic / stainless steel / polycarbonate

DERUTA SILT 26

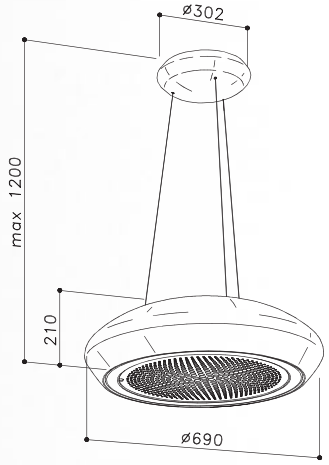

motor: **550 m3 h**
absorption: **100 w**
noise level: **68 dBA**
Lighting: **rounded led 20W**

SILT18

Sirius design

chrome stainless steel / fiberglass

motor: **550 m³/h**
absorption: **135 W**
noise level: **50 dBA**
lighting: **1 led x 3 W**

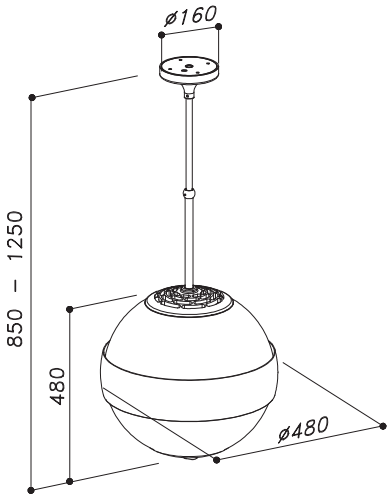

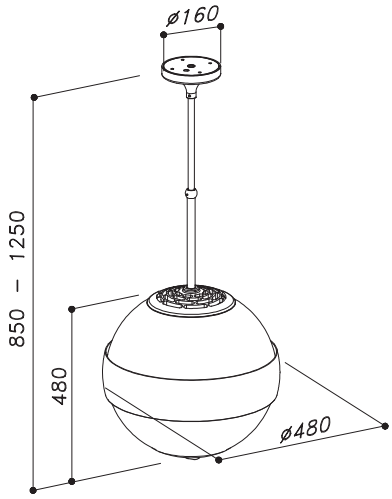

SILT18-L

AMBIENT LIGHT

Sirius design

chrome stainless steel / fiberglass

motor: **550 m³/h**
absorption: **135 W**
noise level: **50 dBA**
lighting: **2 x 40 W round neon**

SILT21

Sirius design

stainless steel

motor: **550 m³/h**
absorption: **135 W**
noise level: **50 dBA**
lighting: **4 leds x 1 W**

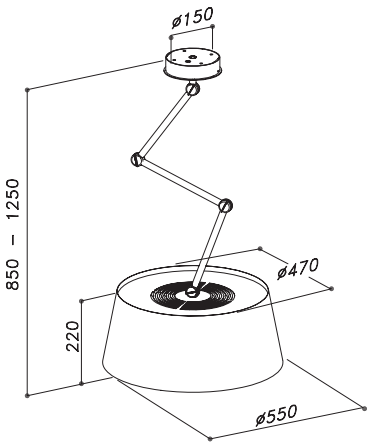

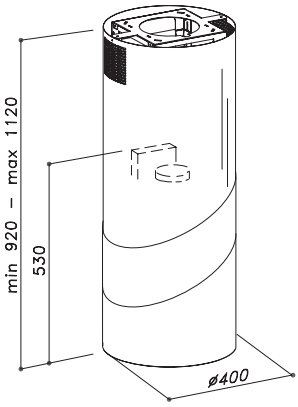

MO 406

Sirius design

stainless steel / polished stainless steel

Product name	*Motor*	*Model Identifier*	*EEI*
MO 406	on-board	I406040RC1020857	B

energy label data p. 126

MO 404

Sirius design

stainless steel

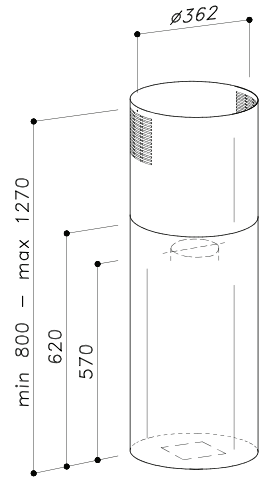

Product name	*Motor*	*Model Identifier*	*EEI*
MO 404 *remote control*	on-board	I404036RC1020904	B
MO 404 *Push-button*	on-board	I404036PB1020904	B

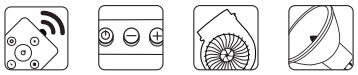

energy label data p. 126

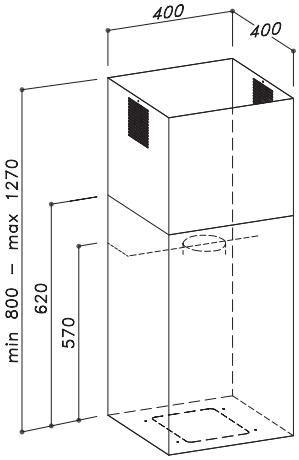

MO 405

Sirius design

stainless steel

Product name	*Motor*	*Model Identifier*	*EEI*
MO 405 *remote control*	on-board	I405040RC1020904	B
MO 405 *Push-button*	on-board	I405040PB1020904	B

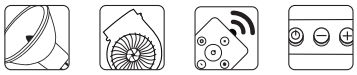

energy label data p. 126

SIL 24 TC

Sirius design

stainless steel / glass

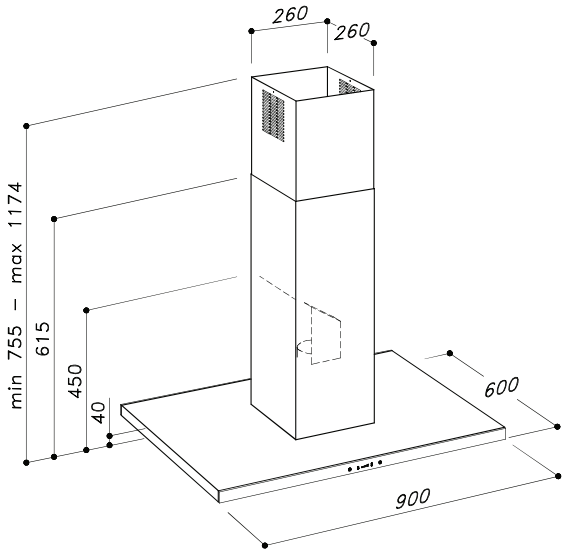

energy label data p. 126

Product name	*Dimension*	*Motor*	*Model Identifier*	*EEI*
SIL 24 90 TC	900	on-board	I024090TC1020137	B

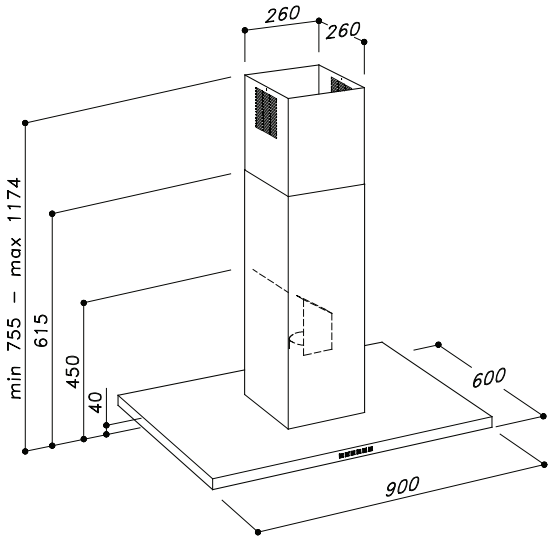

SIL 24

Sirius design

stainless steel

Product name	*Dimension*	*Motor*	*Model Identifier*	*EEI*
SIL 24 90	900	on-board	I024090PB1020137	B

energy label data p. 126

SIL 5

Sirius design

stainless steel

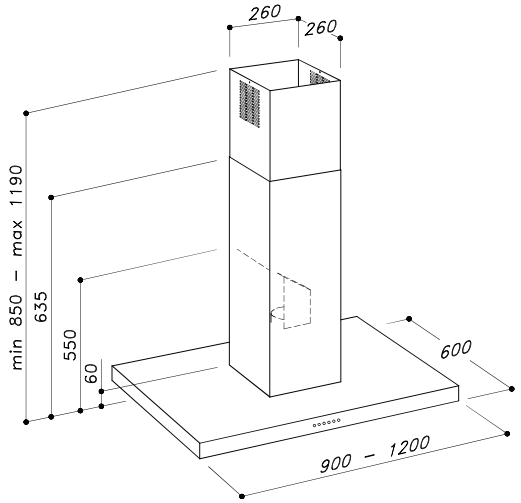

Product name	*Dimension*	*Motor*	*Model Identifier*	*EEI*
SIL 5 90	900	on-board	I005090PB1020637	A
SIL 5 120	1200	on-board	I005120PB1020637	A
SIL-EM 5 90	900	SEM1	I005090PB1140637	B
SIL-EM 5 90	900	SEM2	I005090PB1150637	B

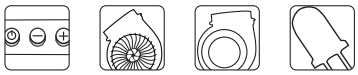

energy label data p. 126

The motor is not included on the external motor version. See p. 124

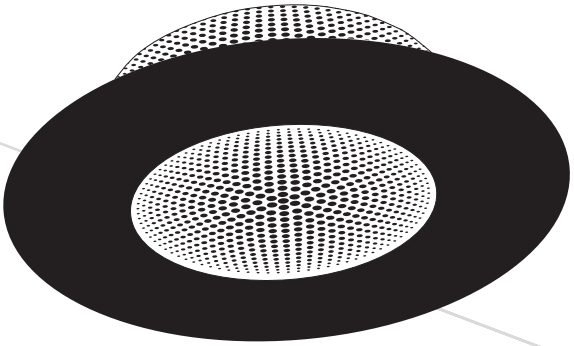

CEILING HOODS

RING SLT 962
SLT 960
SLT 963
SLT 958 WHITE
SLT 958
SLT 955
SLT 956
SLT 952
SLT 953
SLT 951

RING SLT 962

design Giacomo Fava

stainless steel / aluminium

energy label data p. 127

RING SLT 962

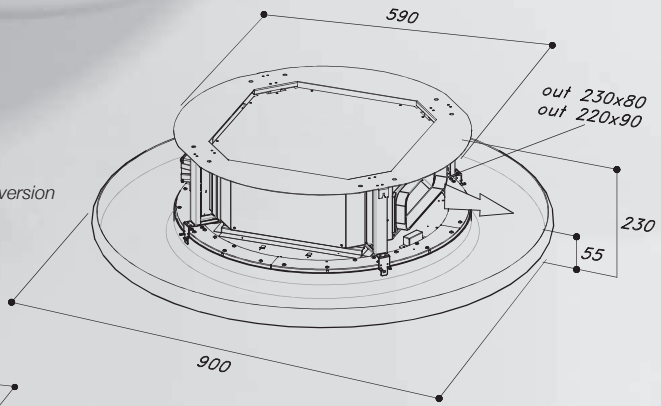

built-in version

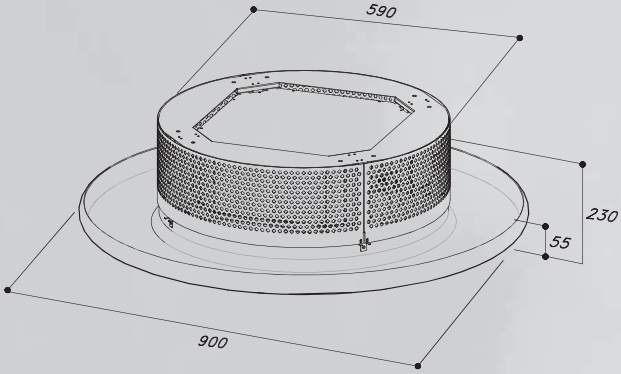

freestanding version (recirculating only)

	Product name	*Motor*	*Model Identifier*	*EEI*
freestanding/built in	SLT 962	on-board	C962090RC1071940	C
built in	SLT 962-EM	SEM1	C962090RC1141940	B
built in	SLT 962-EM	SEM2	C962090RC1151940	C
built in	SLT 962-EM	SEM8	C962090RC1171940	C

note

- For the installation create a false ceiling with a niche of Ø 700mm whose height to be reached is 175mm
- The motor is not included on the external motor version. p. 124

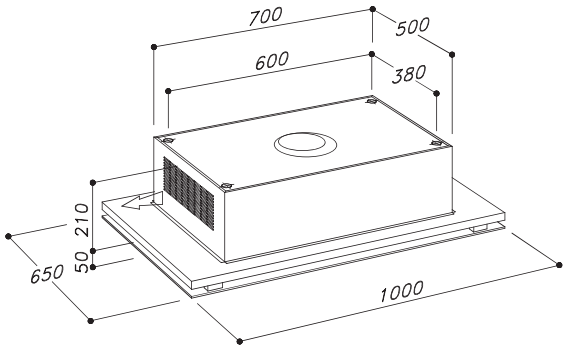

freestanding version (recirculating only)

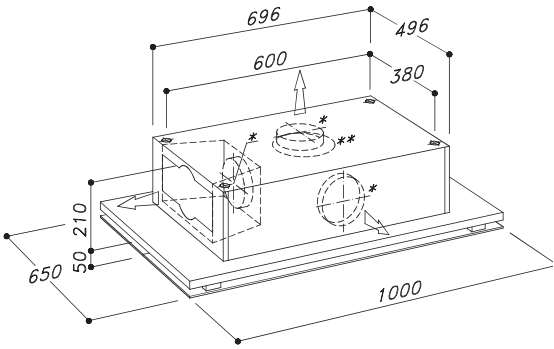

built-in version

SLT960

stainless steel / white glass

	Product name	*Motor*	*Model Identifier*	*EEI*
freestanding/built in	SLT 960	on-board	C960110RC1020435	B
built in	SLT 960-EM	SEM1	C960110RC1140435	B
built in	SLT 960-EM	SEM2	C960110RC1150435	C
built in	SLT 960-EM	SEM8	C960110RC1170435	C

note

- For the installation create a false ceiling with a niche of 800mm x 600mm whose minimum height to be reached is 215mm

- The motor is not included on the external motor version. p. 124

* Ø 150mm - ** Ø 200mm

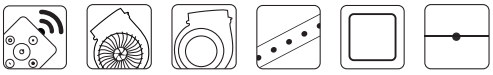

energy label data p. 127

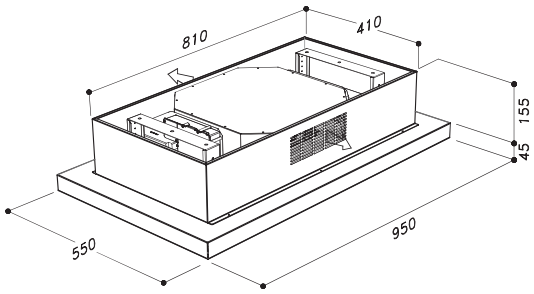

freestanding version (recirculating only)

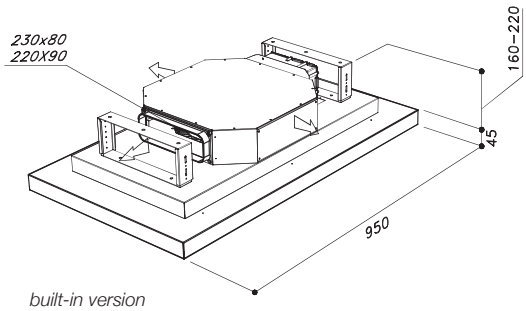

built-in version

SLT963

Sirius design

stainless steel / white painted / white glass

	Product name	*Motor*	*Model Identifier*	*EEI*
freestanding/built in	SLT 963	on-board	C963095RC1070324	C
built in	SLT 963-EM	SEM1	C963095RC1140324	B
built in	SLT 963-EM	SEM2	C963095RC1150324	C
built in	SLT 963-EM	SEM8	C963095RC1170324	C

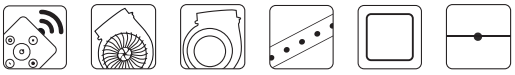

energy label data p. 127

note

- For the installation create a false ceiling with a niche of 900mm x 500mm whose minimum height to be reached is 160mm
- The motor is not included on the external motor version. p. 124

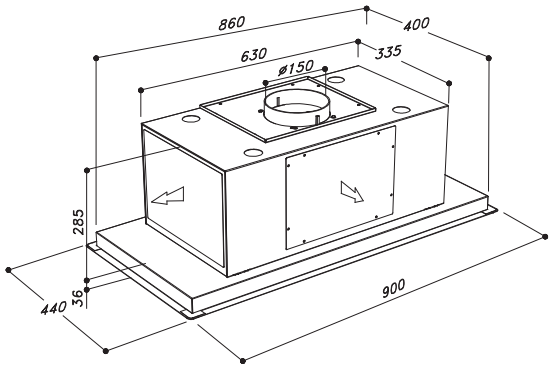

motor on board

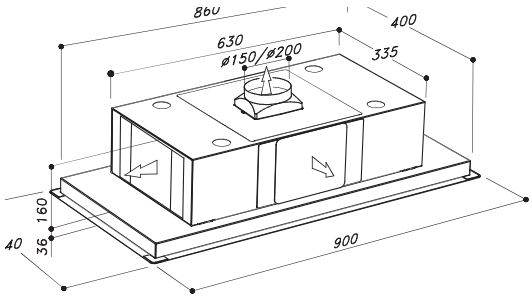

external motor

SLT958 WHITE

Sirius design

stainless steel / white painted / white glass

Product name	*Motor*	*Model Identifier*	*EEI*
SLT 958 W	on-board	C958090RC1020137	B
SLT 958-EM W	SEM1	C958090RC1140137	B
SLT 958-EM W	SEM2	C958090RC1150137	B
SLT 958-EM W	SEM8	C958090RC1170137	B

note motor on board

- For the installation create a false ceiling with a niche of 865mm x 405mm whose minimum height to be reached is 330mm

note external motor

- For the installation create a false ceiling with a niche of 865mm x 405mm whose minimum height to be reached is 270mm
- The motor is not included on the external motor version. p. 124

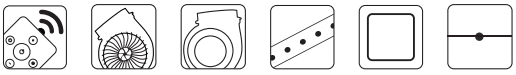

energy label data p. 127

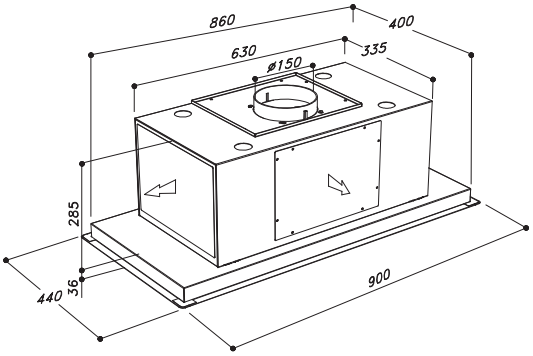

motor on board

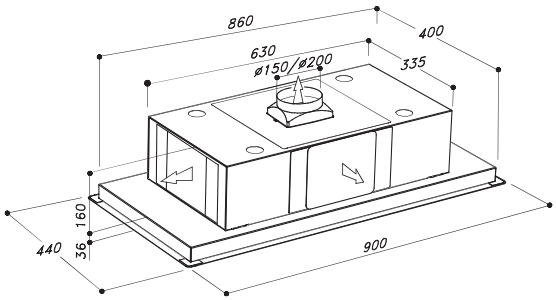

external motor

SLT958

Sirius design

stainless steel

Product name	*Motor*	*Model Identifier*	*EEI*
SLT 958	on-board	C958090RC1020137	B
SLT 958-EM	SEM1	C958090RC1140137	B
SLT 958-EM	SEM2	C958090RC1150137	B
SLT 958-EM	SEM8	C958090RC1170137	B

note motor on board

- For the installation create a false ceiling with a niche of 865mm x 405mm whose minimum height to be reached is 330mm

note external motor

- For the installation create a false ceiling with a niche of 865mm x 405mm whose minimum height to be reached is 270mm
- The motor is not included on the external motor version. p. 124

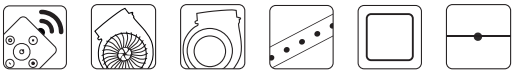

energy label data p. 127

SLT955

Sirius design

false-ceiling / stainless steel / fiberglass (light)

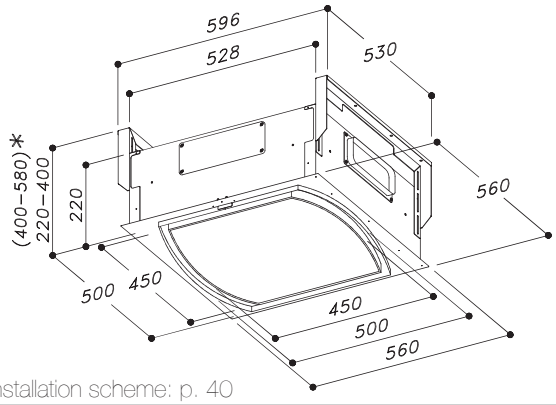

installation scheme: p. 40

Product/Main module	*Motor*	*Model Identifier*	*EEI*
SLT 955-EM *inox*	SEM1	C955056RC114XX33	B
SLT 955-EM *inox*	SEM2	C955056RC115XX33	B
SLT 955-EM *inox*	SEM8	C955056RC117XX33	B
SLT 955-EM *light*	SEM1	C955056RC1141533	C
SLT 955-EM *light*	SEM2	C955056RC1151533	C
SLT 955-EM *light*	SEM8	C955056RC1171533	C
SLT 955-EM *for panel*	SEM1	C955056RC114XX33	B
SLT 955-EM *for panel*	SEM2	C955056RC115XX33	B
SLT 955-EM *for panel*	SEM8	C955056RC117XX33	B

energy label data p. 127

the motor is not included on the external motor version. p. 124

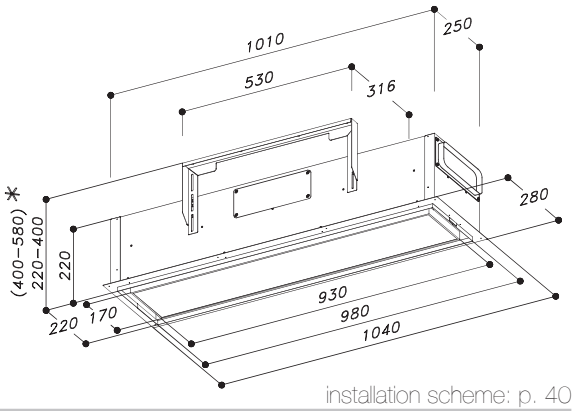

installation scheme: p. 40

Product/Main module	*Motor*	*Model Identifier*	*EEI*
SLT 956-EM *inox*	SEM1	C956104RC114XX34	B
SLT 956-EM *inox*	SEM2	C956104RC115XX34	B
SLT 956-EM *inox*	SEM8	C956104RC117XX34	B
SLT 956-EM *light*	SEM1	C956104RC1141734	C
SLT 956-EM *light*	SEM2	C956104RC1151734	C
SLT 956-EM *light*	SEM8	C956104RC1171734	C
SLT 956-EM *for panel*	SEM1	C956104RC114XX34	B
SLT 956-EM *for panel*	SEM2	C956104RC115XX34	B
SLT 956-EM *for panel*	SEM8	C956104RC117XX34	B

SLT956

Sirius design

false-ceiling / stainless steel / fiberglass (light)

energy label data p. 127

the motor is not included on the external motor version. p. 124

in-line motor version

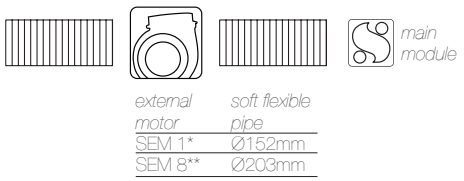

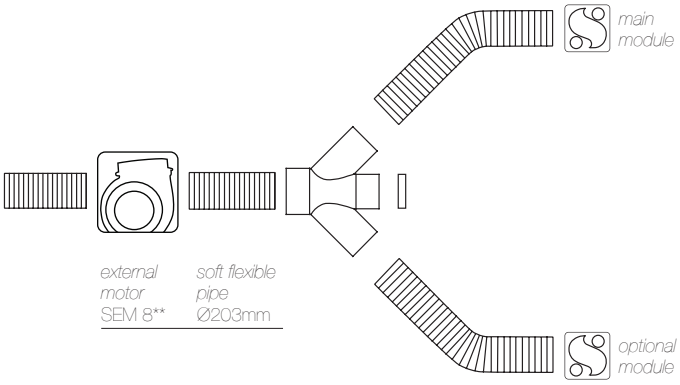

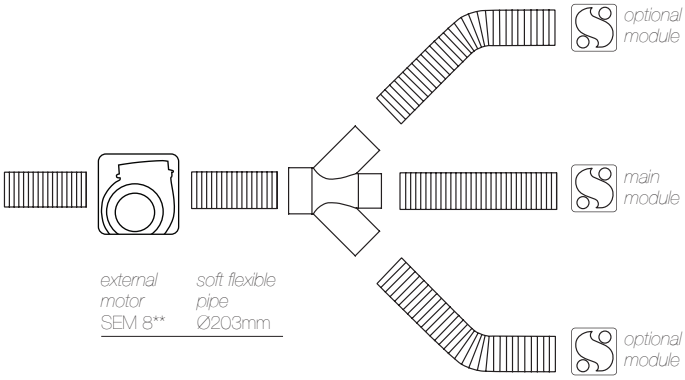

remote motor version

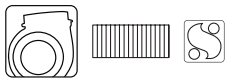

external motor	soft flexible pipe
SEM 2*	Ø152mm

filtering version

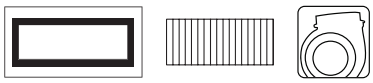

air deviator S-DF2

soft flexible pipe	external motor
Ø152mm	SEM 1*
Ø203mm	SEM 8**

INSTALLATION SCHEME

SLT955 - SLT956

SLT955 and SLT 956 are available in different versions. The customer can choose the number of modules adding extra items/accessories to the main functional one. All the modules are available in 3 different finishes: stainless, light and false-ceiling. *The motor is always external and both recirculation and ducted options are available. The following drawing shows all the detailed information on the installation of the product according to the customer's needs and desired combination.*

* to be used in the single module installation
** to be used in all modules installation

SLT955

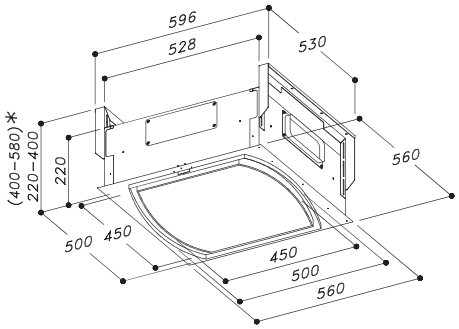

For the installation create a niche of
502mm x 502mm
whose minimum height to be
reached is 220mm.
Minimum distance between is
110mm.

** kit high fixing (accessories)*

SLT956

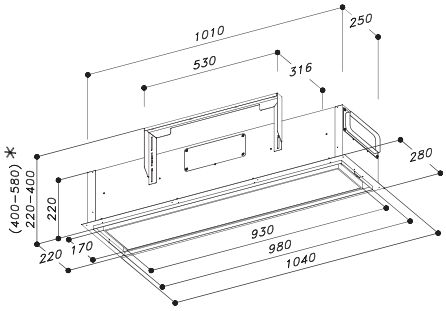

For the installation create a niche of
222mm x 982mm
whose minimum height to be
reached is 220mm.
Minimum distance between is
110mm.

** kit high fixing (accessories)*

air deviator S-DF2

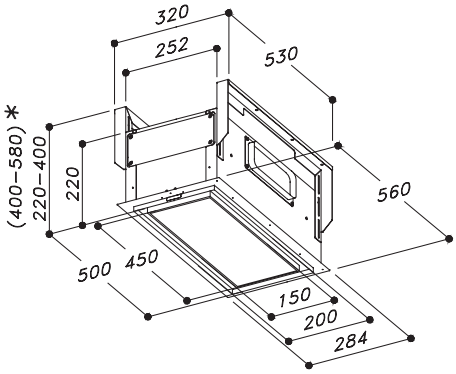

For the installation of air deviator
S-DF2 create a niche of
502mm x 202mm
whose minimum height to be
reached is 220mm.

The air deviator needs to be
installed at a minimun distance of
1500mm from the extractor.

** kit high fixing (accessories)*

INSTALLATION SCHEME

SLT955 - SLT956

INSTALLATION KIT

installation recycling kit
(optional air deviator + 3 filter)

installation kit 2/3
modules

soft flexible pipe
Ø152mm

soft flexible pipe
Ø203mm

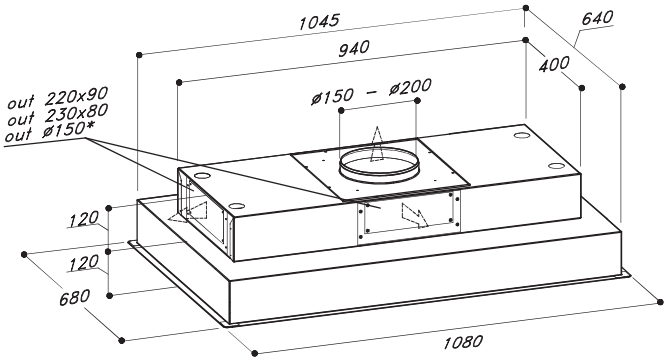

SLT952

Sirius design

stainless steel

Product name	*Motor*	*Model Identifier*	*EEI*
SLT 952-EM	SEM1	C952108RC1141413	C
SLT 952-EM	SEM2	C952108RC1151413	C
SLT 952-EM	SEM8	C952108RC1171413	C

note

- For the installation create a niche of 1050mm x 645mm whose minimum height to be reached is 250mm
- The motor is not included on the external motor version. p. 124

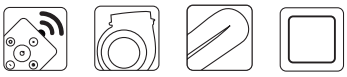

energy label data p. 127

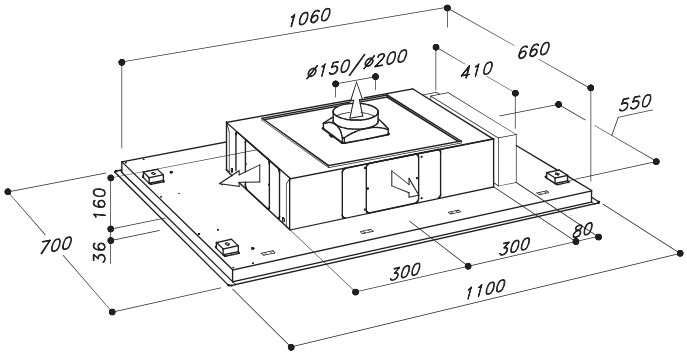

SLT953

Sirius design

stainless steel

Product name	*Motor*	*Model Identifier*	*EEI*
SLT 953-EM	SEM1	C953110RC1141037	C
SLT 953-EM	SEM2	C953110RC1151037	C
SLT 953-EM	SEM8	C953110RC1171037	C

note

- For the installation create a niche of 1065mm x 665mm whose minimum height to be reached is 270mm
- The motor is not included on the external motor version. p. 124

energy label data p. 127

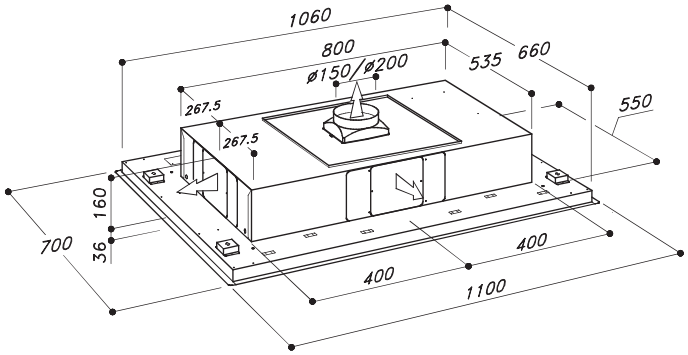

SLT951

Sirius design

stainless steel

Product name	*Motor*	*Model Identifier*	*EEI*
SLT 951-EM	SEM1	C951110RC1141037	C
SLT 951-EM	SEM2	C951110RC1151037	C
SLT 951-EM	SEM8	C951110RC1171037	C

note

- For the installation create a false ceiling with a niche of 1065mm x 665mm whose minimum height to be reached is 270mm

the motor is not included on the external motor version. p. 124

energy label data p. 127

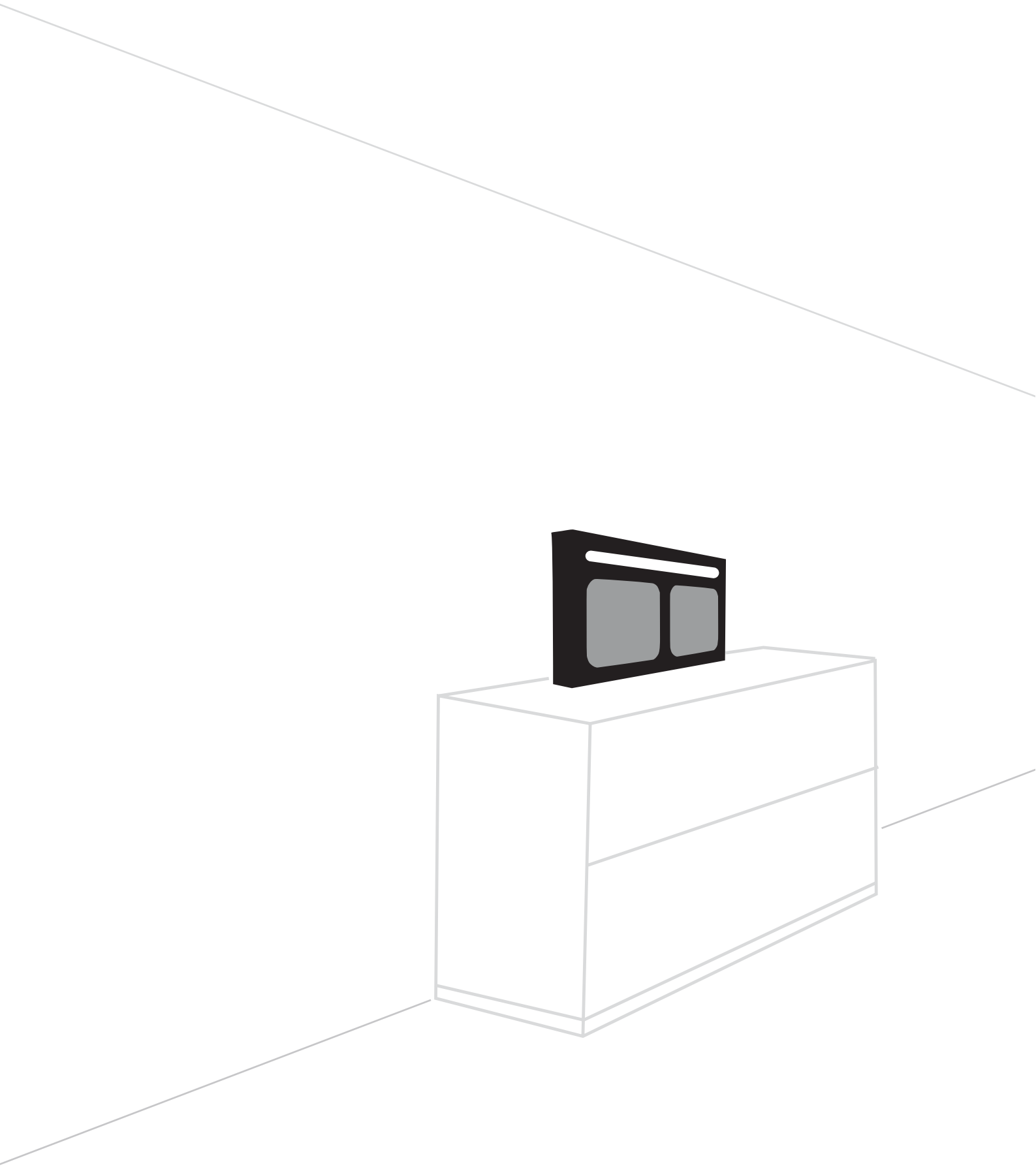

DOWNDRAFT UP-RIGHT

SMOOTH SDD12
PUSH UP SDD11
SDD8 TC
SDD2 L TC
SDD2 L INOX
SDD2 TC
SDD2 INOX
SDD4 TC
SDD3 TC
UP-RIGHT BUILT IN
UP-RIGHT TC

SMOOTH SDD12 TC

design Giacomo Fava

stainless steel / glass

energy label data p. 128

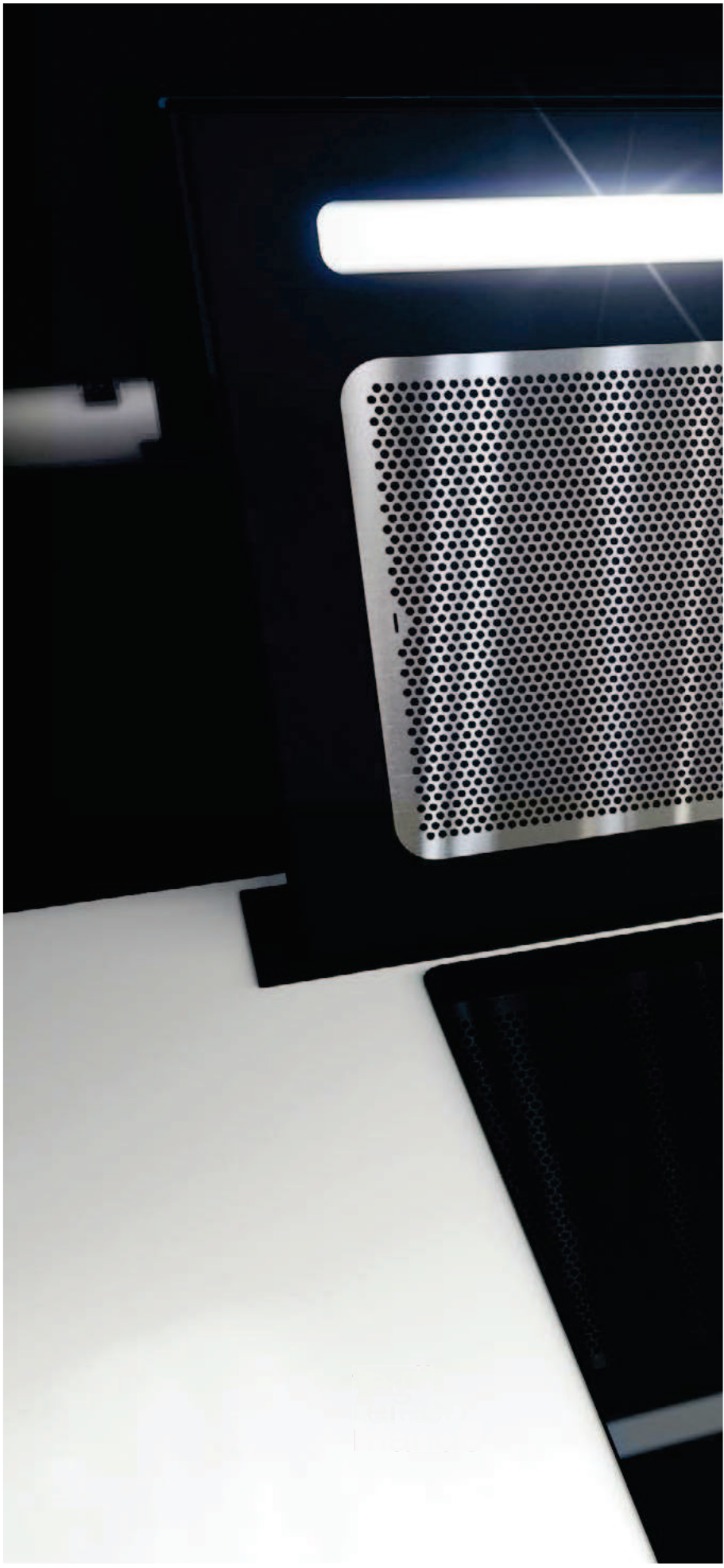

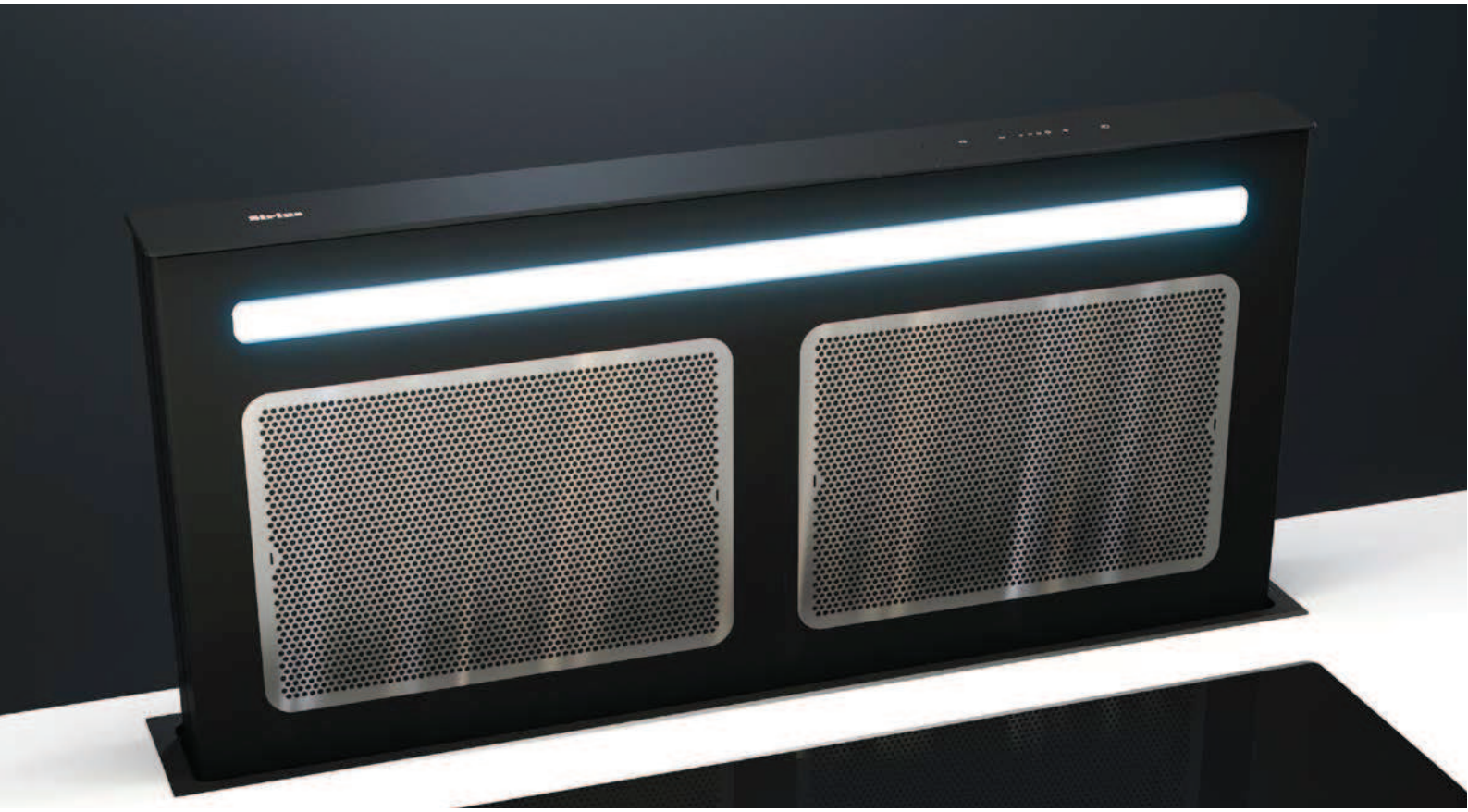

motor on board

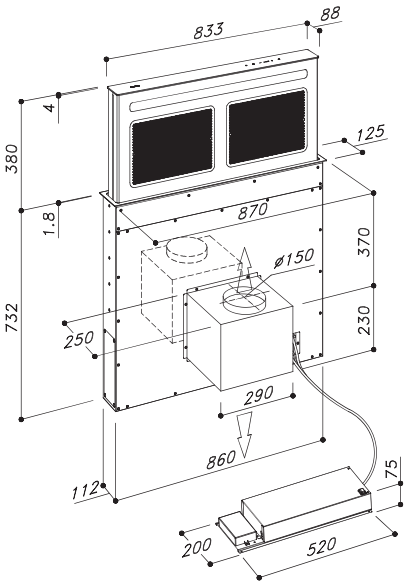

external motor

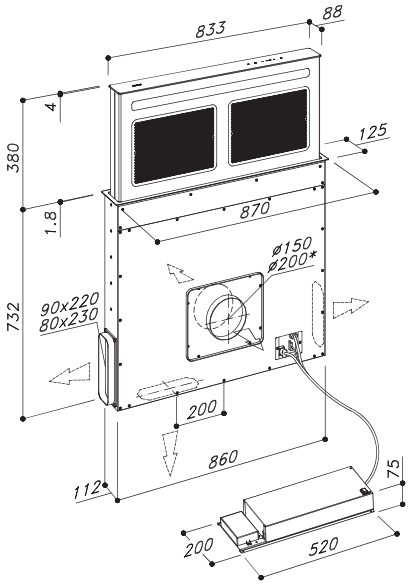

SMOOTH

SDD12 TC

note

- For the installation create a niche in the countertop of 115mm x 865mm
- This downdraft is equipped with anti-crushing safety system

The motor on board needs to be purchased separately.

The motor is not included on the external motor version. See p. 124

Product name	*Dimension*	*Motor*	*Model Identifier*	*EEI*
S-DD12 TC	870	on-board	D012088TC1022339	B
S-DD12 EM TC	870	SEM1	D012088TC1142339	B
S-DD12 EM TC	870	SEM2	D012088TC1152339	B
S-DD12 EM TC	870	SEM8	D012088TC1172339	B
S-DD12 EM TC	870	SEM10	D012088TC1192339	C

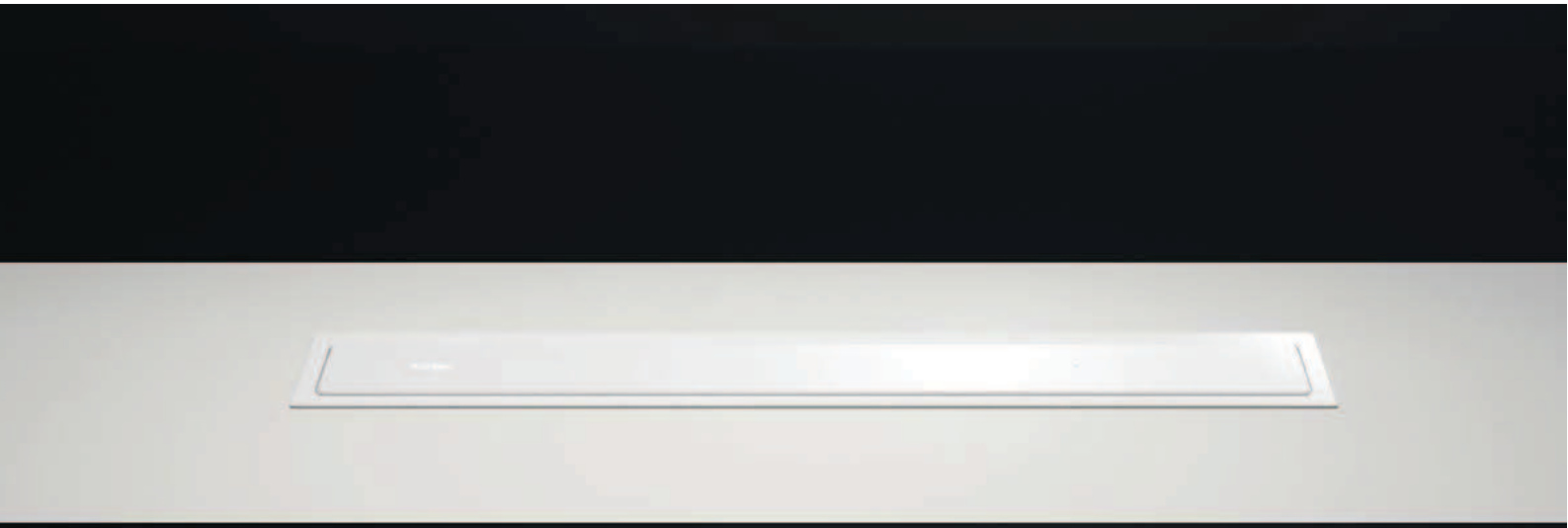

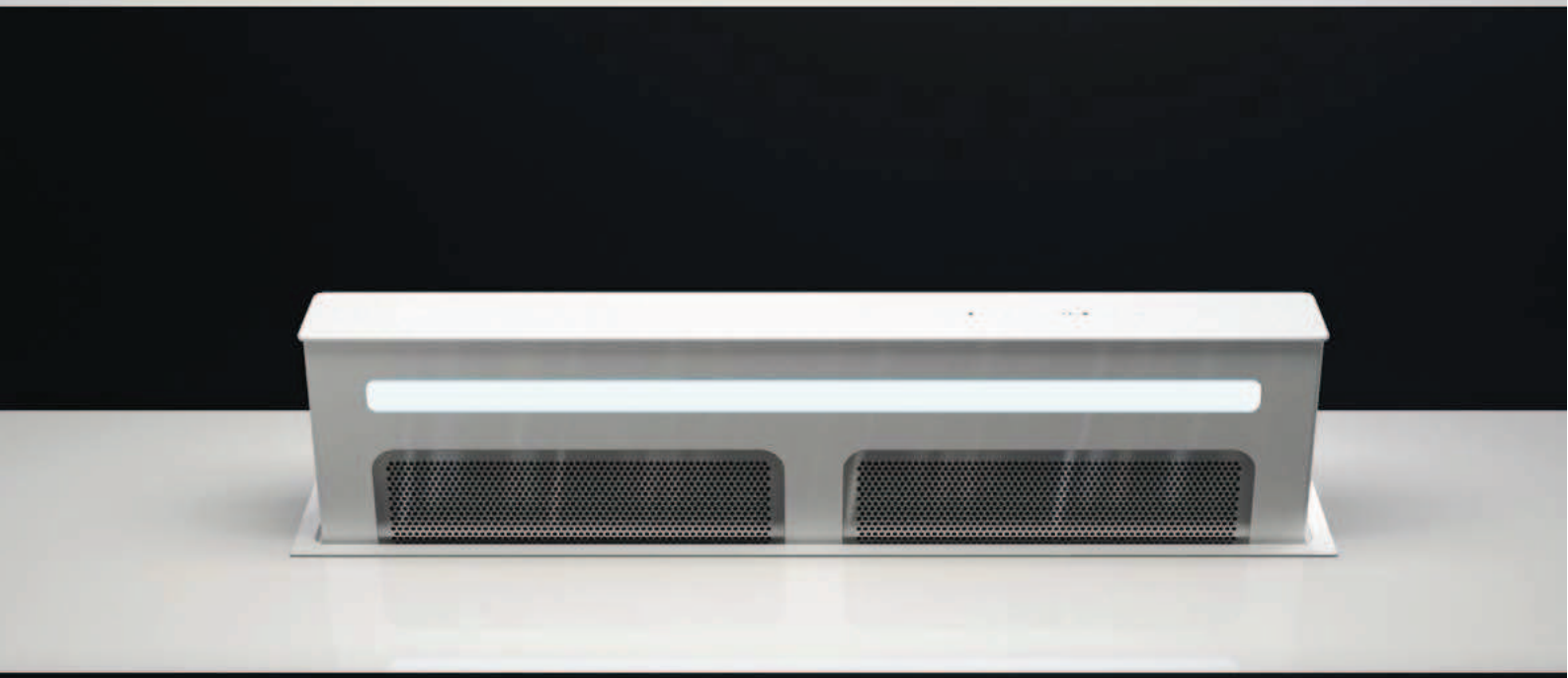

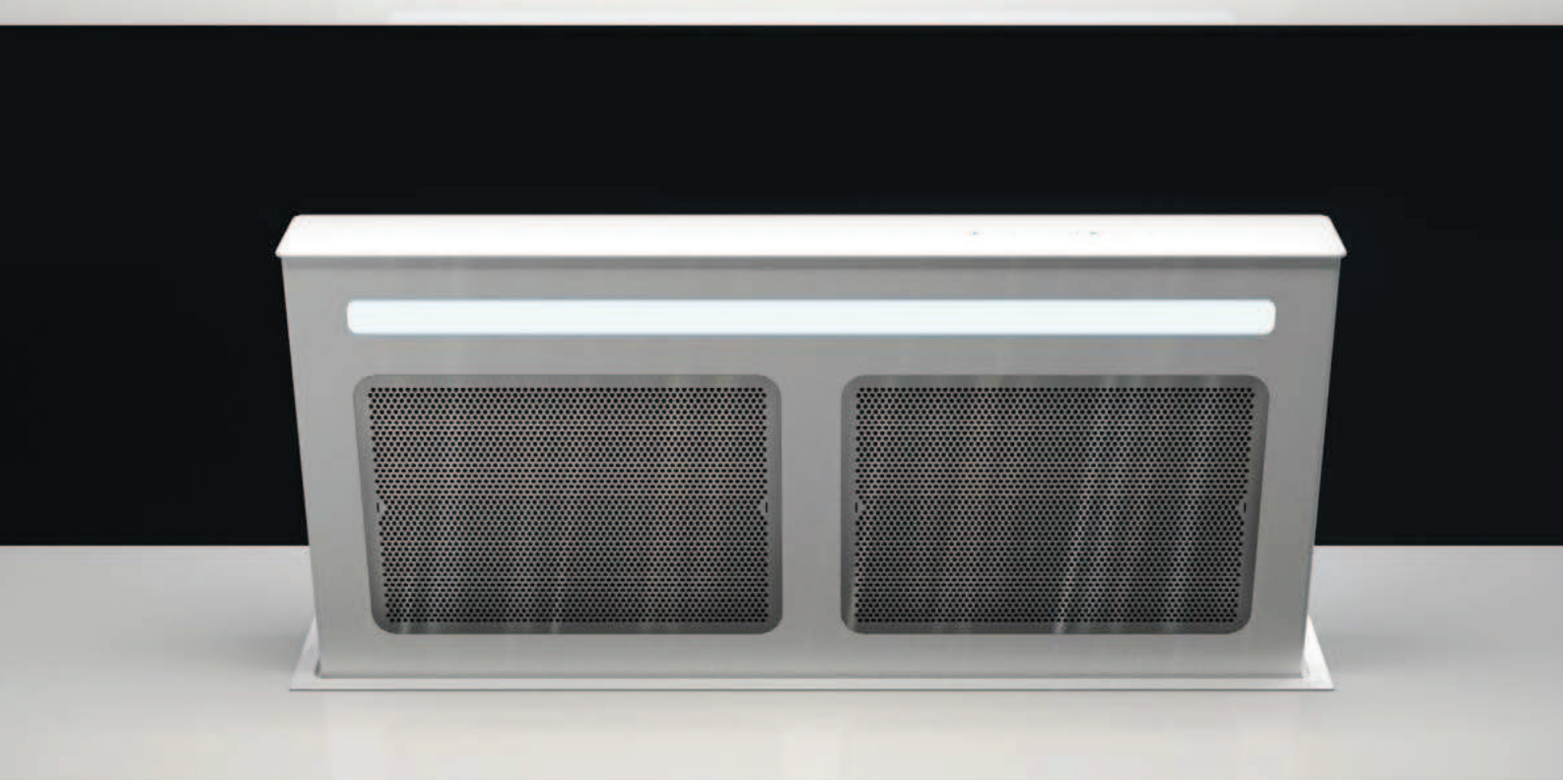

PUSH UP SDD11

design Giacomo Fava

stainless steel / glass

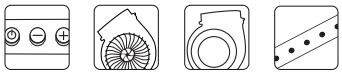

energy label data p. 128

PUSH UP SDD11

Product name	*Dimension*	*Motor*	*Model Identifier*	*EEI*
S-DD11	810	on-board	D011088PB1022219	B
S-DD11 EM	810	SEM1	D011088PB1142219	B
S-DD11 EM	810	SEM2	D011088PB1152219	B

note

- For the installation create a niche in the countertop of 100mm x 790mm
- This downdraft is equipped with anti-crushing safety system
- The motor on board needs to be purchased separately.
- The motor is not included on the external motor version. See p. 124

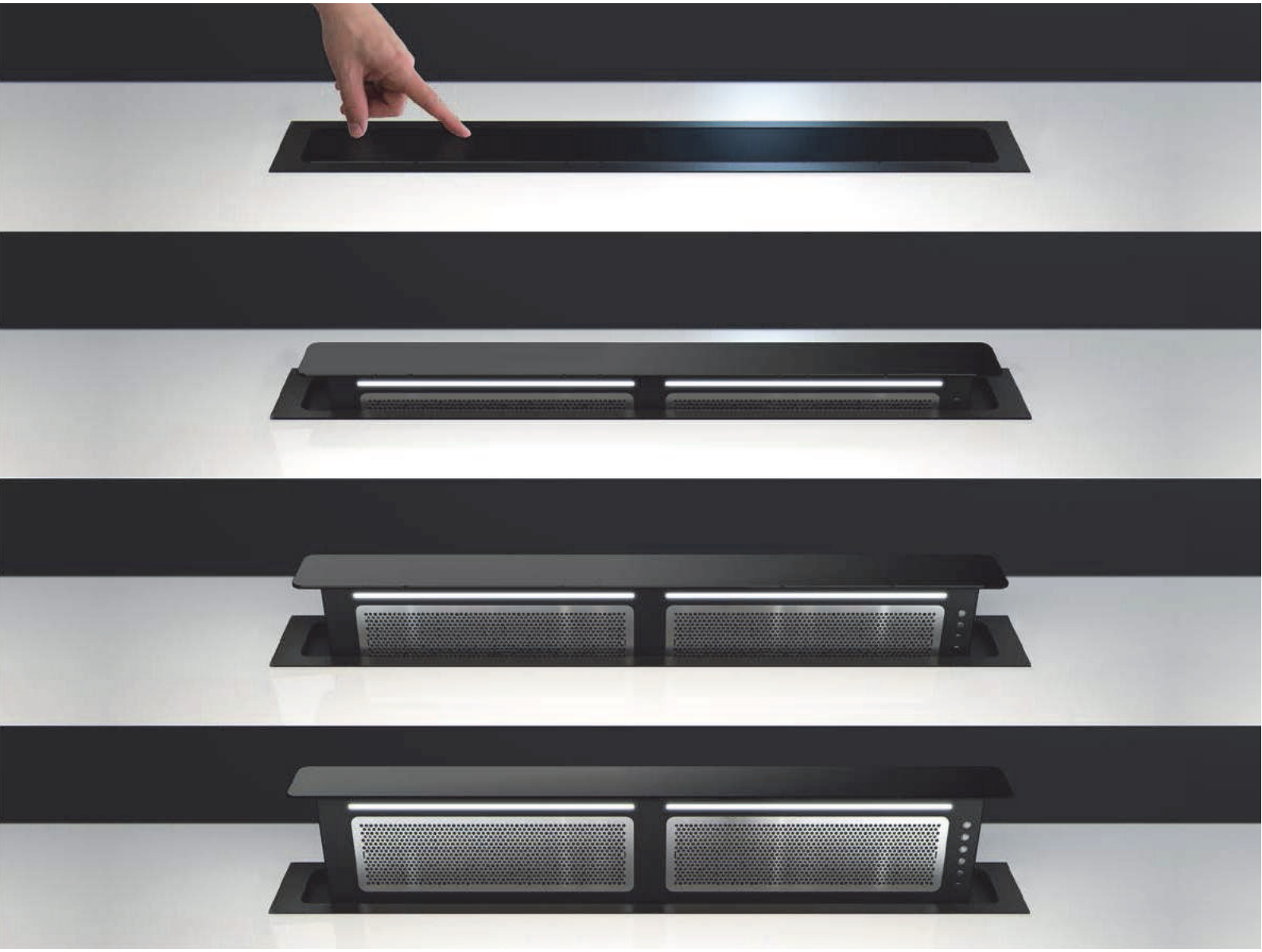

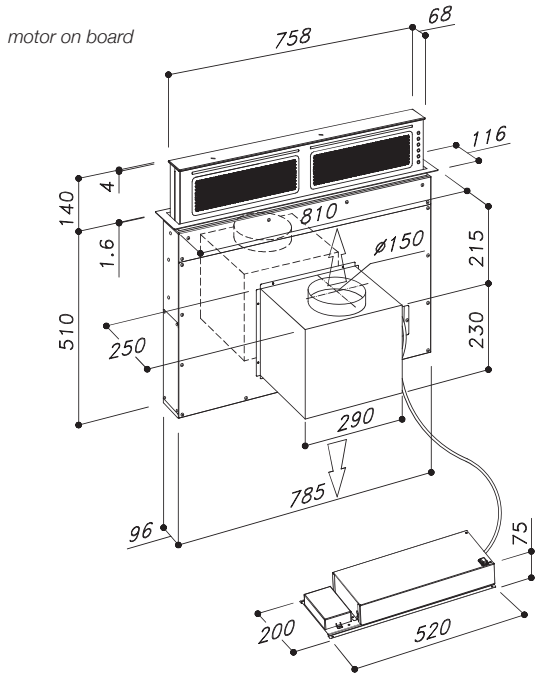
motor on board
758
68
116
4
140
1.6
810
ø150
215
510
250
230
290
785
96
75
200
520

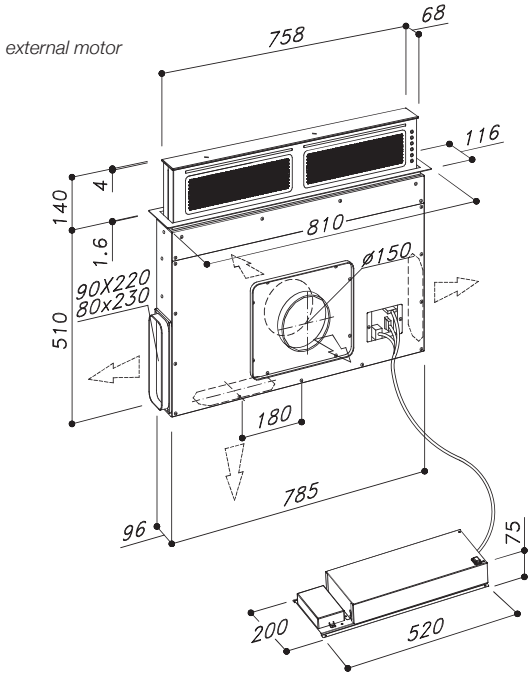
external motor
758
68
116
4
140
1.6
810
ø150
90X220
80x230
510
180
785
96
75
200
520

SDD8 TC

Sirius design

stainless steel AISI 304 / glass

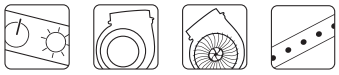

energy label data p. 128

external motor

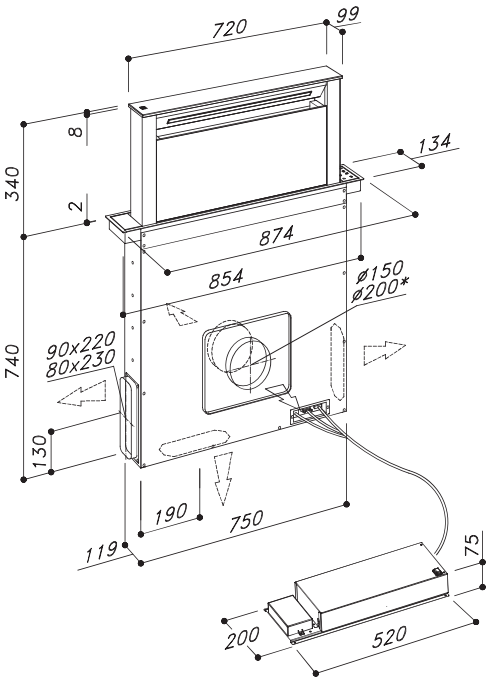

motor on board

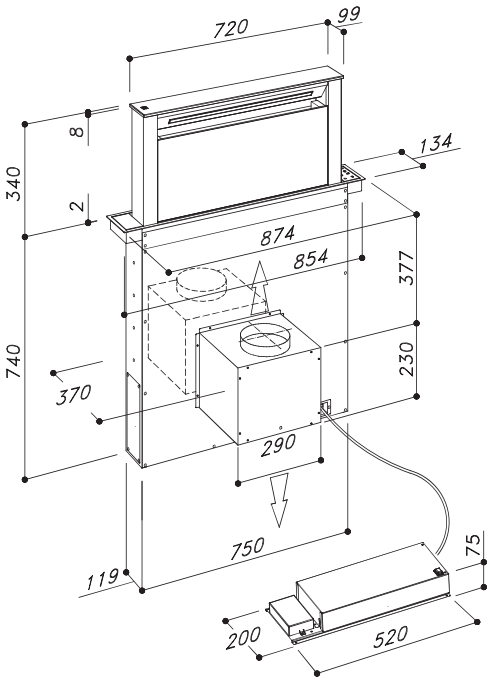

Product name	*Dimension*	*Motor*	*Model Identifier*	*EEI*
S-DD8-L TC	870	on-board	D008087TC1020223	A
S-DD8-L-EM TC	870	SEM1	D008087TC1140223	B
S-DD8-L-EM TC	870	SEM2	D008087TC1150223	C
S-DD8-L-EM TC	870	SEM8	D008087TC1170223	C
S-DD8-L-EM TC	870	SEM10	D008087TC1190223	C

TECHNICAL DATA

note

- For the installation create a a niche in the countertop of 120mm x 856mm
- This downdraft is equipped with anti-crushing safety system
- The motor on board needs to be purchased separately.
- The motor is not included on the external motor version. See p. 124

SDD2 L TC

Sirius design

stainless steel AISI 304 / glass

energy label data p. 128

external motor

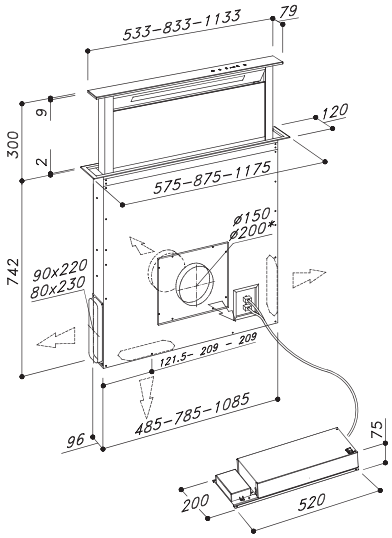

motor on board

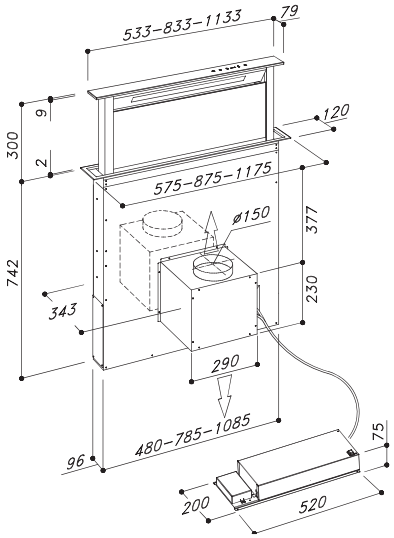

Product name	*Dimension*	*Motor*	*Model Identifier*	*EEI*
S-DD2-L TC LED	875	on-board	D002088TC1022415	A
S-DD2-L TC EM LED*	875	SEM1	D002088TC1142415	B
S-DD2-L TC EM LED*	875	SEM2	D002088TC1152415	C
S-DD2-L TC EM LED*	875	SEM8	D002088TC1172415	C
S-DD2-L TC EM LED*	875	SEM10	D002088TC1192415	C
S-DD2-L TC	575	on-board	D002058TC1021116	B
S-DD2-L-EM TC	575	SEM1	D002058TC1141116	B
S-DD2-L-EM TC	575	SEM2	D002058TC1151116	C
S-DD2-L-EM TC	575	SEM8	D002058TC1171116	C
S-DD2-L-EM TC	575	SEM10	D002058TC1191116	C
S-DD2-L TC	875	on-board	D002088TC1021415	B
S-DD2-L-EM TC	875	SEM1	D002088TC1141415	B
S-DD2-L-EM TC	875	SEM2	D002088TC1151415	C
S-DD2-L-EM TC	875	SEM8	D002088TC1171415	C
S-DD2-L-EM TC	875	SEM10	D002088TC1191415	C
S-DD2-L TC	1175	on-board	D002118TC1021317	B
S-DD2-L-EM TC	1175	SEM1	D002118TC1141317	B
S-DD2-L-EM TC	1175	SEM2	D002118TC1151317	C
S-DD2-L-EM TC	1175	SEM8	D002118TC1171317	C
S-DD2-L-EM TC	1175	SEM10	D002118TC1191317	C

TECHNICAL DATA

note

- For the installation create a niche in the countertop using the following dimensions:

100x542mm	for 575mm
100x842mm	for 875mm
100x1142mm	for 1175mm

- This downdraft is equipped with anti-crushing safety system
- The motor is not included on the external motor version. See p. 55
- The motor on board needs to be purchased separately.

**led light version*

SDD2 L INOX

Sirius design

stainless steel AISI 304

energy label data p. 128

external motor

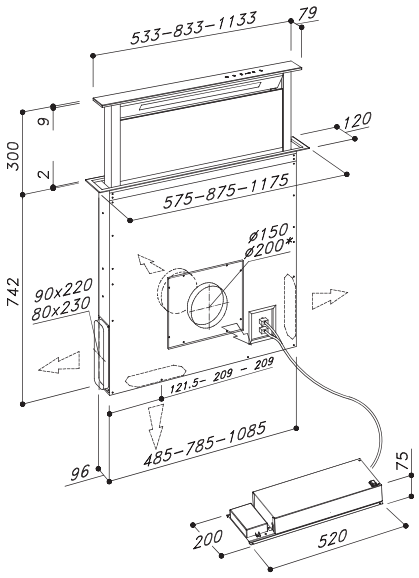

motor on board

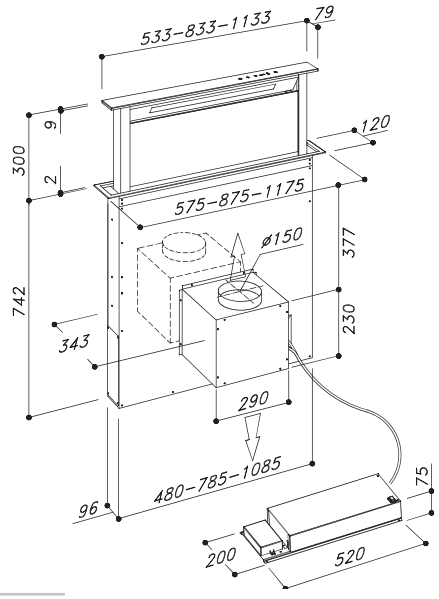

Product name	*Dimension*	*Motor*	*Model Identifier*	*EEI*
S-DD2-L INOX LED	875	on-board	D002088PB1022415	A
S-DD2-L INOX EM LED*	875	SEM1	D002088PB1142415	B
S-DD2-L INOX EM LED*	875	SEM2	D002088PB1152415	C
S-DD2-L INOX EM LED*	875	SEM8	D002088PB1172415	C
S-DD2-L INOX EM LED	875	SEM10	D002088PB1192415	C
S-DD2-L-INOX	575	on-board	D002058PB1021116	B
S-DD2-L-EM INOX	575	SEM1	D002058PB1141116	B
S-DD2-L-EM INOX	575	SEM2	D002058PB1151116	C
S-DD2-L-EM INOX	575	SEM8	D002058PB1171116	C
S-DD2-L-EM INOX	575	SEM10	D002058PB1191116	C
S-DD2-L-INOX	875	on-board	D002088PB1021415	B
S-DD2-L-EM INOX	875	SEM1	D002088PB1141415	B
S-DD2-L-EM INOX	875	SEM2	D002088PB1151415	C
S-DD2-L-EM INOX	875	SEM8	D002088PB1171415	C
S-DD2-L-EM INOX	875	SEM10	D002088PB1191415	C
S-DD2-L-INOX	1175	on-board	D002118PB1021317	B
S-DD2-L-EM INOX	1175	SEM1	D002118PB1141317	B
S-DD2-L-EM INOX	1175	SEM2	D002118PB1151317	C
S-DD2-L-EM INOX	1175	SEM8	D002118PB1171317	C
S-DD2-L-EM INOX	1175	SEM10	D002118PB1191317	C

TECHNICAL DATA

note

- For the installation create a niche in the countertop using the following dimensions:

100x542mm for 575mm
100x842mm for 875mm
100x1142mm for 1175mm

- This downdraft is equipped with anti-crushing safety system
- The motor is not included on the external motor version. See p. 124
- The motor on board needs to be purchased separately.

**led light version*

SDD2 TC

Sirius design

stainless steel AISI 304 / inox

energy label data p. 128

external motor

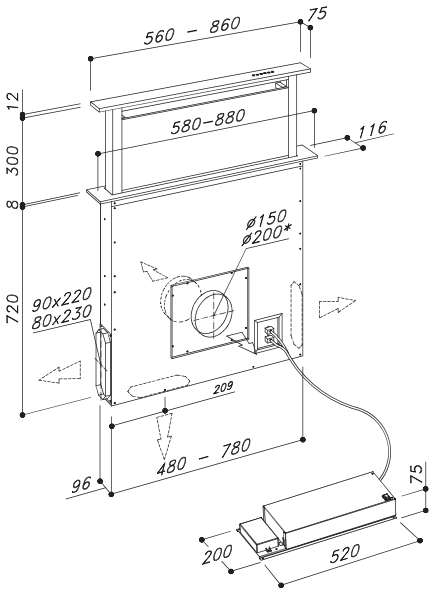

motor on board

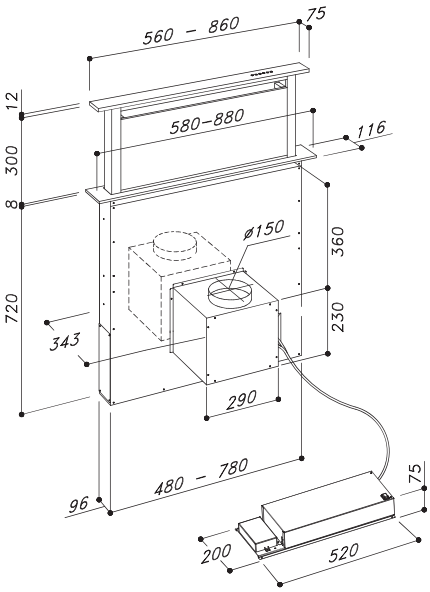

Product name	*Dimension*	*Motor*	*Model Identifier*	*EEI*
S-DD2 TC	580	on-board	D002058TC102XX07	B
S-DD2-EM TC	580	SEM1	D002058TC114XX07	B
S-DD2-EM TC	580	SEM2	D002058TC115XX07	C
S-DD2-EM TC	580	SEM8	D002058TC117XX07	C
S-DD2-EM TC	580	SEM10	D002058TC119XX07	C
S-DD2 TC	880	on-board	D002088TC102XX05	A
S-DD2-EM TC	880	SEM1	D002088TC114XX05	B
S-DD2-EM TC	880	SEM2	D002088TC115XX05	B
S-DD2-EM TC	880	SEM8	D002088TC117XX05	C
S-DD2-EM TC	880	SEM10	D002088TC119XX05	B

TECHNICAL DATA

note

- For the installation create a niche in the countertop using the following dimensions:

100x490mm	for 580mm
100x790mm	for 880mm

- This downdraft is equipped with anti-crushing safety system
- The motor is not included on the external motor version. See p. 124
- The motor on board needs to be purchased separately.

SDD2 INOX

Sirius design

stainless steel AISI 304 / glass

energy label data p. 128

external motor

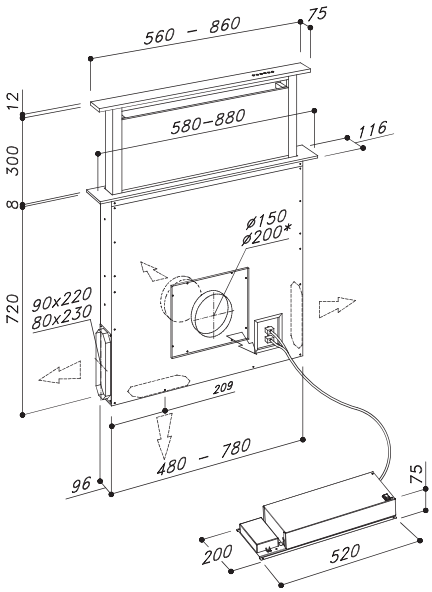

motor on board

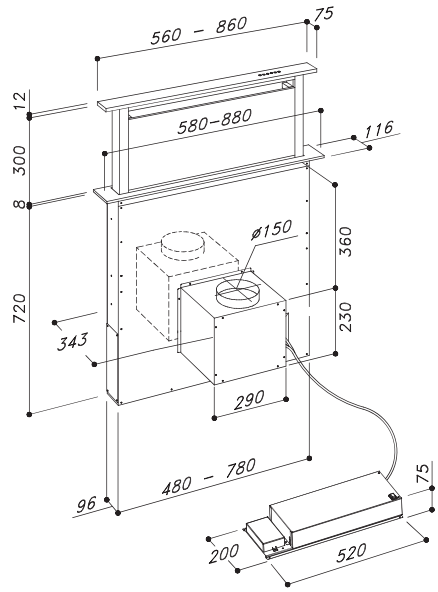

Product name	*Dimension*	*Motor*	*Model Identifier*	*EEI*
S-DD2 INOX	580	on-board	D002058PB102XX07	B
S-DD2-EM INOX	580	SEM1	D002058PB114XX07	B
S-DD2-EM INOX	580	SEM2	D002058PB115XX07	C
S-DD2-EM INOX	580	SEM8	D002058PB117XX07	C
S-DD2-EM INOX	580	SEM10	D002058PB119XX07	C
S-DD2 INOX	880	on-board	D002088PB102XX05	A
S-DD2-EM INOX	880	SEM1	D002088PB114XX05	B
S-DD2-EM INOX	880	SEM2	D002088PB115XX05	B
S-DD2-EM INOX	880	SEM8	D002088PB117XX05	C
S-DD2-EM INOX	880	SEM10	D002088PB119XX05	B

TECHNICAL DATA

note

- For the installation create a niche in the countertop using the following dimensions:

100x490mm	for 580mm
100x790mm	for 880mm

- This downdraft is equipped with anti-crushing safety system
- The motor is not included on the external motor version. See p. 124
- The motor on board needs to be purchased separately.

SDD4 TC

Sirius design

stainless steel AISI 304 / glass

energy label data p. 128

external motor

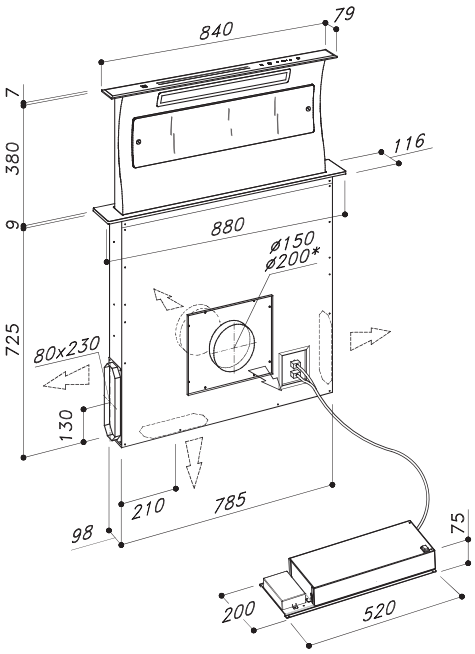

motor on board

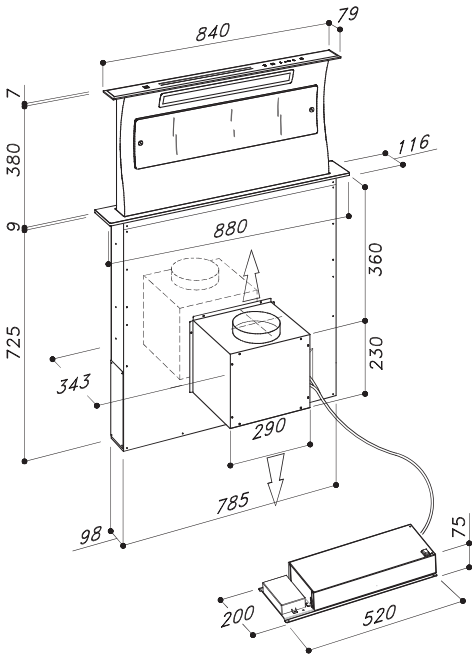

Product name	*Dimension*	*Motor*	*Model Identifier*	*EEI*
S-DD4 TC	880	on-board	D004088TC1021415	B
S-DD4-EM TC	880	SEM1	D004088TC1141415	B
S-DD4-EM TC	880	SEM2	D004088TC1151415	C
S-DD4-EM TC	880	SEM8	D004088TC1171415	C
S-DD4-EM TC	880	SEM10	D004088TC1191415	C

TECHNICAL DATA

note

- For the installation create a niche in the countertop using the following dimensions: 100x790mm
- This downdraft is equipped with anti-crushing safety system
- The motor is not included on the external motor version. See p. 124
- The motor on board needs to be purchased separately.

SDD3 TC

Sirius design

stainless steel AISI 304 / glass

energy label data p. 128

external motor

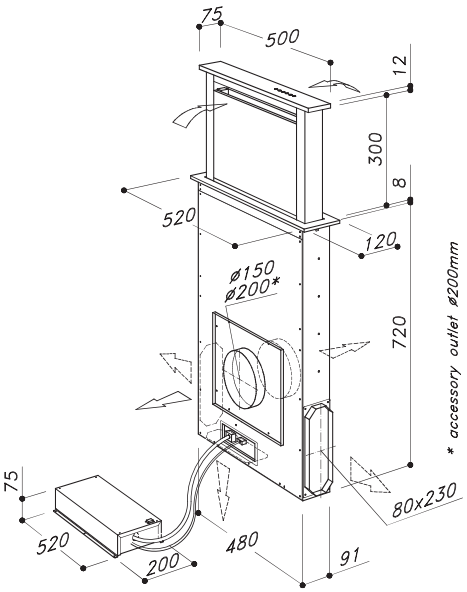

motor on board

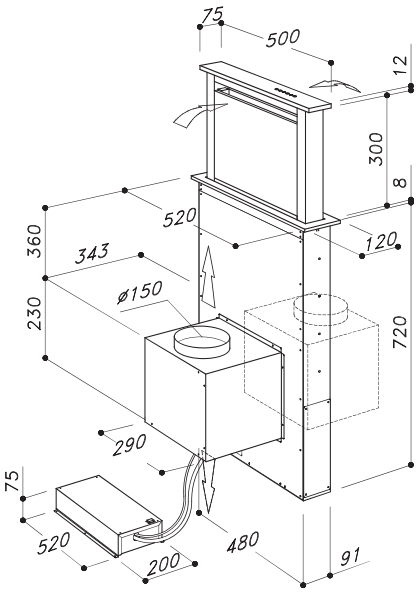

Product name	*Dimension*	*Motor*	*Model Identifier*	*EEI*
S-DD3 TC	520	on-board	D003052TC102XX07	B
S-DD3-EM TC	520	SEM1	D003052TC114XX07	B
S-DD3-EM TC	520	SEM2	D003052TC115XX07	C
S-DD3-EM TC	520	SEM8	D003052TC117XX07	C
S-DD3-EM TC	520	SEM10	D003052TC119XX07	C

TECHNICAL DATA

note

- For the installation create a niche in the countertop using the following dimensions: 104x490mm
- This downdraft is equipped with anti-crushing safety system
- The motor is not included on the external motor version. See p. 124
- The motor on board needs to be purchased separately.

UP-RIGHT BUILT-IN VERSION

Sirius design

stainless steel AISI 304

energy label data p. 128

external motor

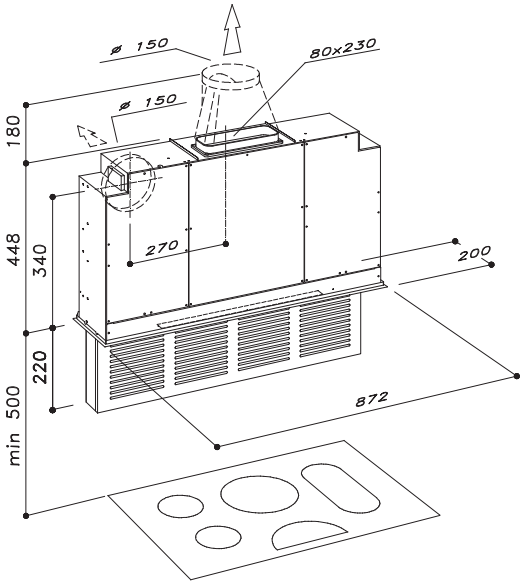

motor on board

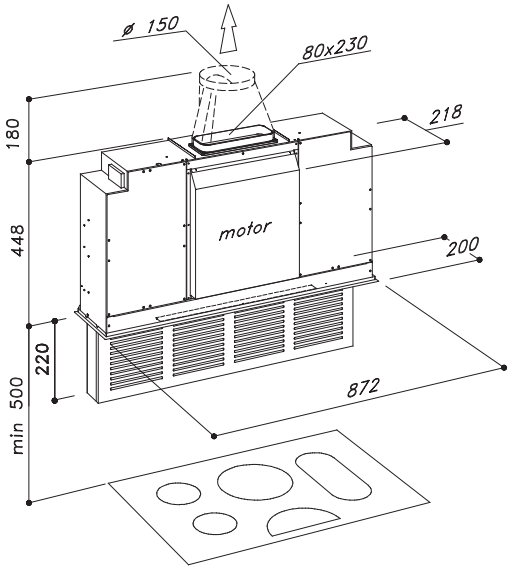

Product name	*Dimension*	*Motor*	*Model Identifier*	*EEI*
UPRIGHT BUILT-IN	872	on-board	U001087RC1110256	C
UPRIGHT-EM BUILT-IN	872	SEM1	U001087RC1140256	B
UPRIGHT-EM BUILT-IN	872	SEM2	U001087RC1150256	B

TECHNICAL DATA

note

- For the installation create a niche in the countertop using the following dimensions: 185x860mm
- The motor is not included on the external motor version. See p. 124
- The “Upright”, a new and innovative product thanks to the exclusive vertical suction system and automatic extraction that represents the most advanced and incomprable concept of technology.

UP-RIGHT TC

Sirius design

stainless steel AISI 430 / glass

energy label data p. 128

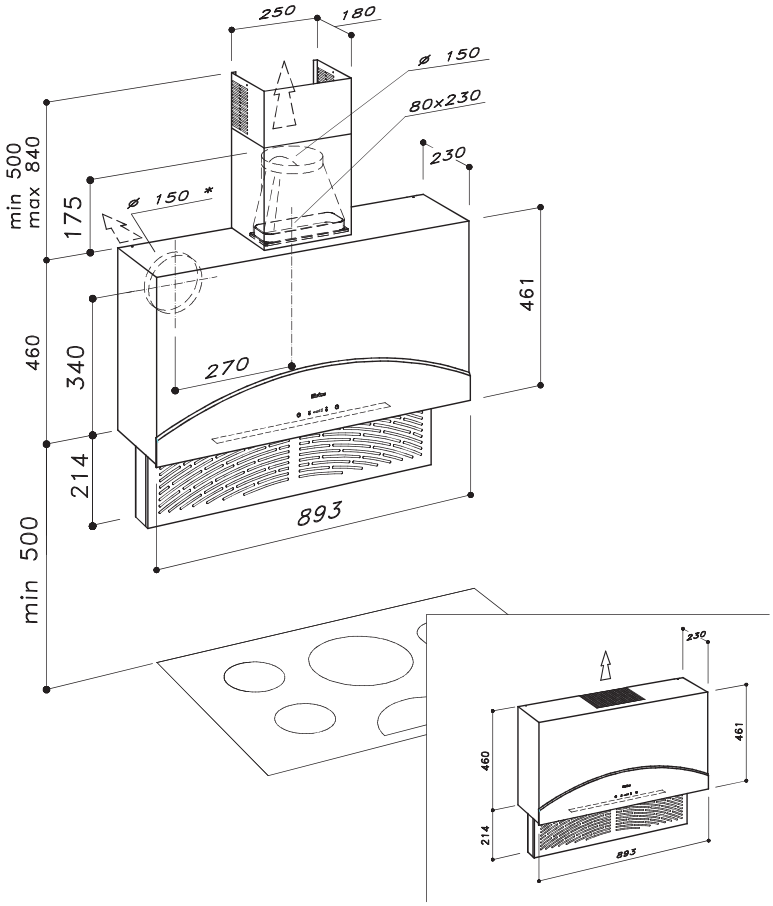

Product name	*Dimension*	*Motor*	*Model Identifier*	*EEI*
UPRIGHT TC *glass-inox*	893	on-board	U002090TC1110256	C
UPRIGHT-EM TC *glass-inox*	893	SEM1	U002090TC1140256	B
UPRIGHT-EM TC *glass-inox*	893	SEM2	U002090TC1150256	B

TECHNICAL DATA

note

The motor is not included on the external motor version. See p. 124

* for the external motor only

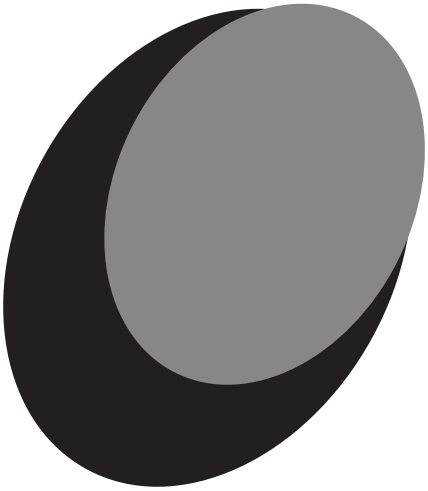

WALL MOUNTED

ECLIPSE SLTC 94
TAKSIM SLTC 95
HOOP SL 96
SKINNY SLTC 93
JEEG SLTC 97
SLTR 75
SLTC 75
SLTC 74
SL 91
SL 90
SLTC 85
SLTC 87
SLTC 86
SL 88
SLTC 92
SL 92
SLTC 81
SL 89
SL 50
MO 207
MO 208
SL 22
SL 26
SL 31
SL 86

ECLIPSE SLTC94

design Giacomo Fava

ceramic / glass

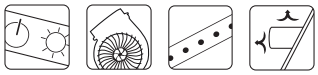

energy label data p. 130

ECLIPSE SLTC94

model identifier	*energetic class*
P094080TC1020113	A

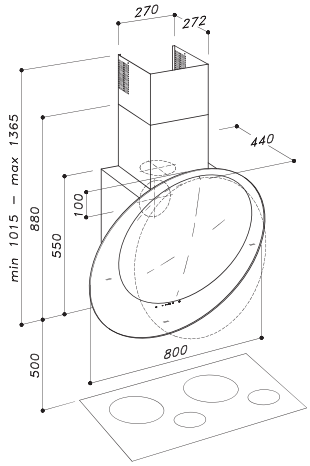

TAKSIM SLTC95

design Giacomo Fava

stainless steel / glass

energy label data p. 130

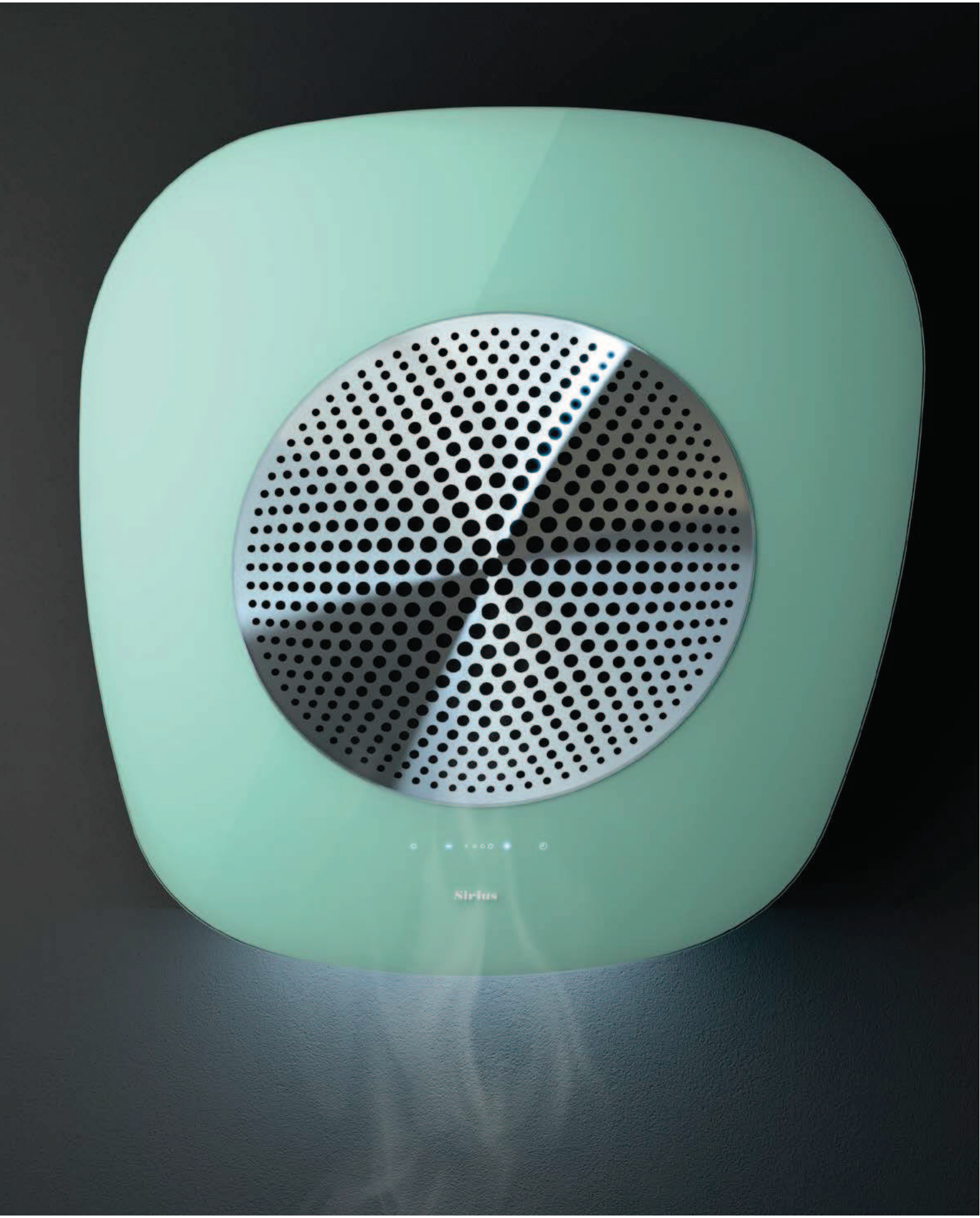
Sirius

TAKSIM SLTC95

model identifier	*energetic class*
P095067TC1020118	A

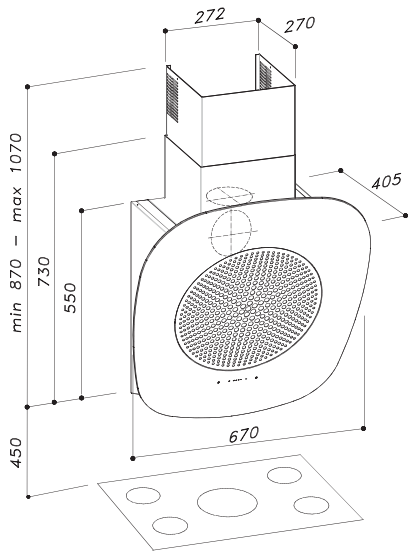

HOOP SL96

design Giacomo Fava

stainless steel

energy label data p. 130

HOOP SL96

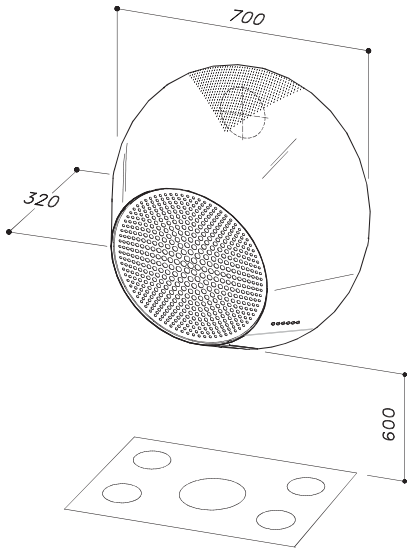

model identifier	*energetic class*
P096070PB1012018	B

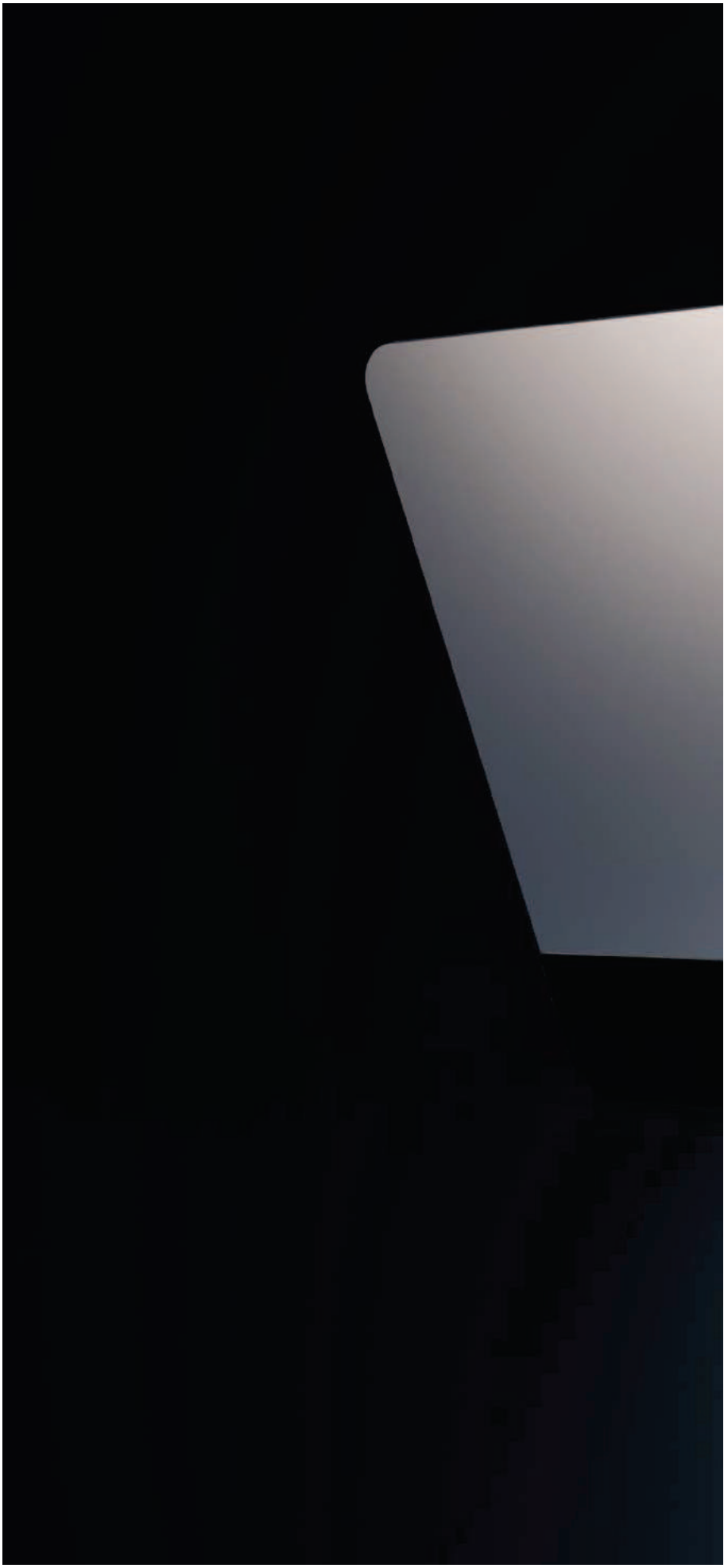

SKINNY SLTC93

design Giacomo Fava

glass

energy label data p. 130

Sirius

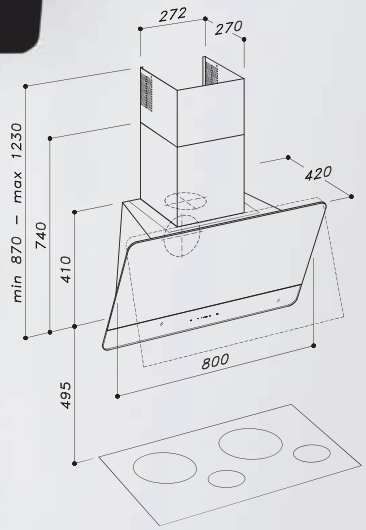

SKINNY SLTC93

model identifier	*energetic class*
P093080TC1020122	A

Siemens

JEEG SLTC97

design Giacomo Fava

stainless steel / glass

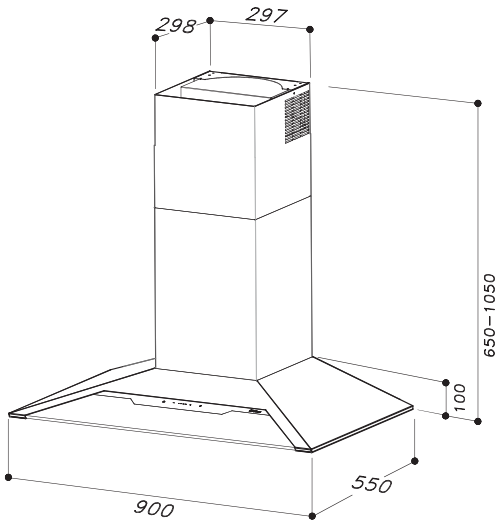

model identifier	*energetic class*
P097090TC1020102	B

energy label data p. 130

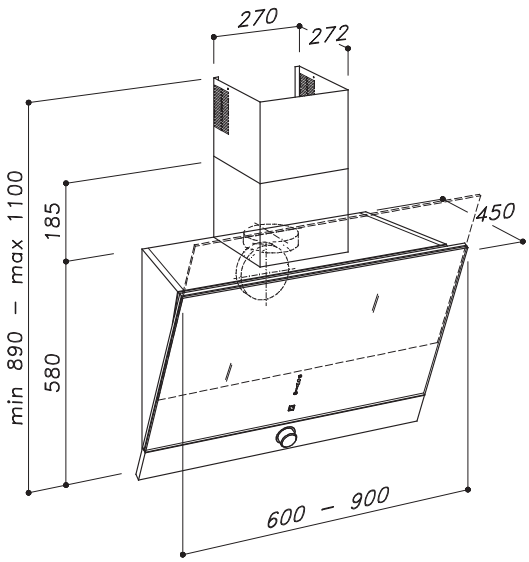

dim. (mm)	model identifier	energetic class
600	P075060RB1010121	B
900	P075090RB1020220	A

SLTR 75

Sirius design

stainless steel / glass

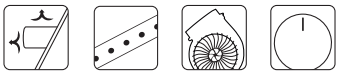

energy label data p. 130

A front panel automatic opening according to the speed selected.

SLTC 75

Sirius design

stainless steel / glass

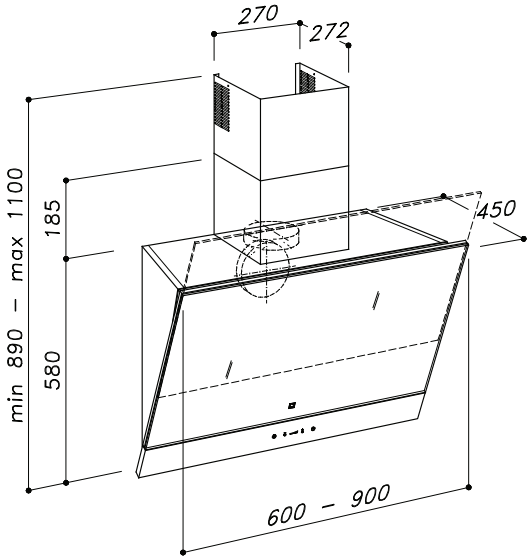

dim. (mm)	*model identifier*	*energetic class*
600	P075060TC1010121	B
900	P075090TC1020220	A

energy label data p. 130

A front panel automatic opening according to the speed selected.

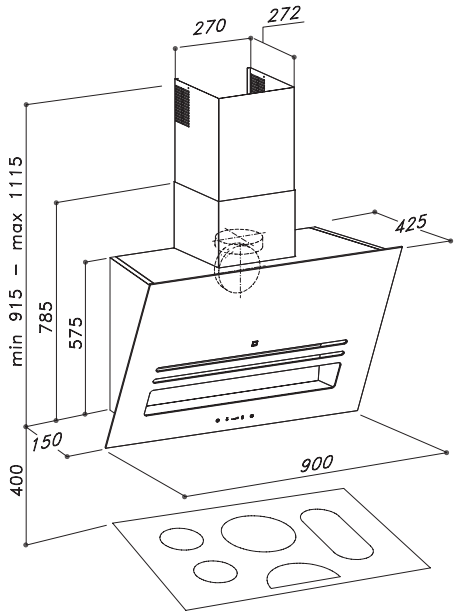

model identifier	energetic class
P074090TC1020720	A

SLTC 74

AMBIENT LIGHT

Sirius design

stainless steel / glass

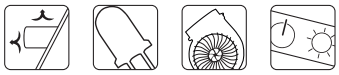

energy label data p. 130

SL 91

glass

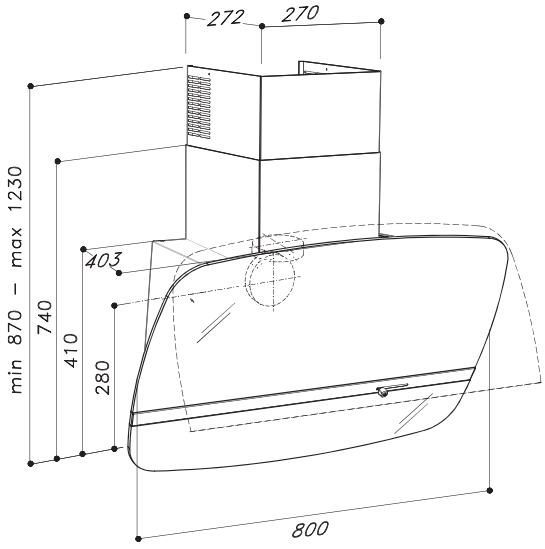

model identifier	*energetic class*
P091080SL1020122	A

energy label data p. 130

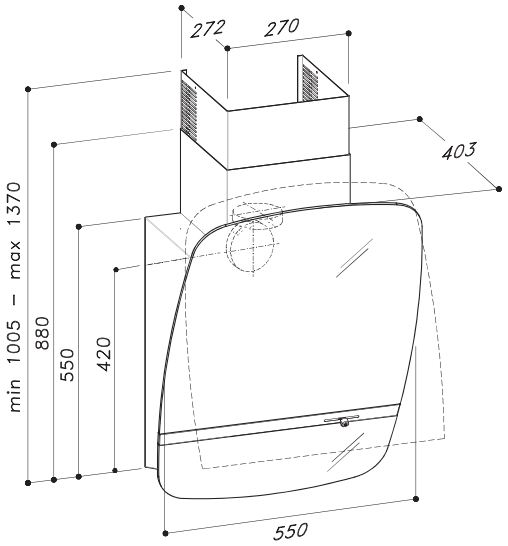

model identifier	energetic class
P090055SL1020113	A

SL 90

glass

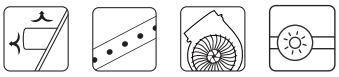

energy label data p. 130

SLTC 85

Sirius design

stainless steel / glass

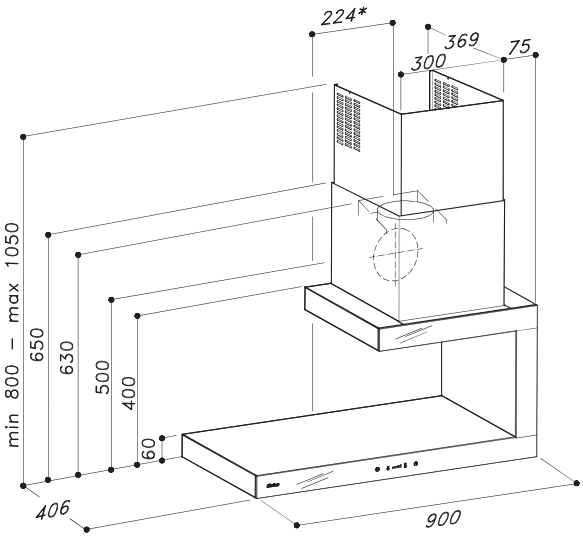

model identifier	*energetic class*
P085090TC1020137	B

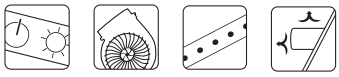

energy label data p. 130

*distance from the center of the hood

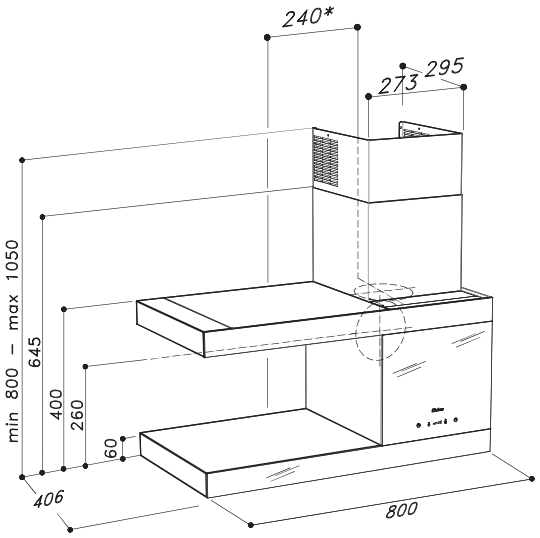

model identifier	*energetic class*
P087080TC1020137	B

SLTC 87

Sirius design

stainless steel / glass

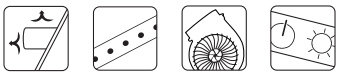

energy label data p. 130

*distance from the center of the hood

SLTC 86

Sirius design

stainless steel / glass

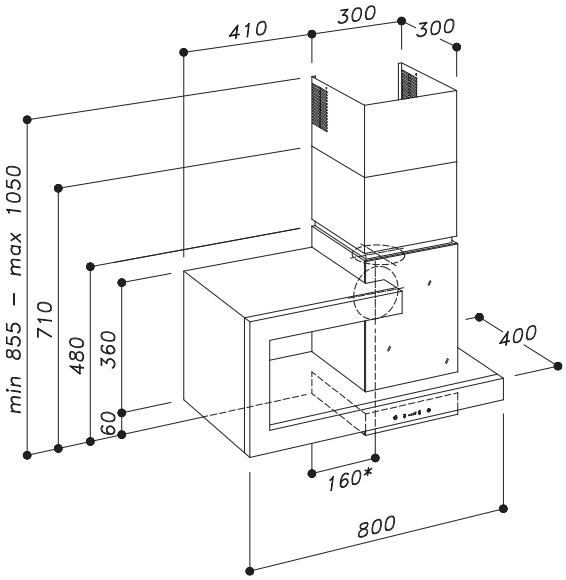

model identifier	*energetic class*
P086080TC1010157	B

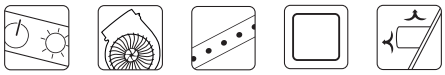

energy label data p. 130

*distance from the center of the hood

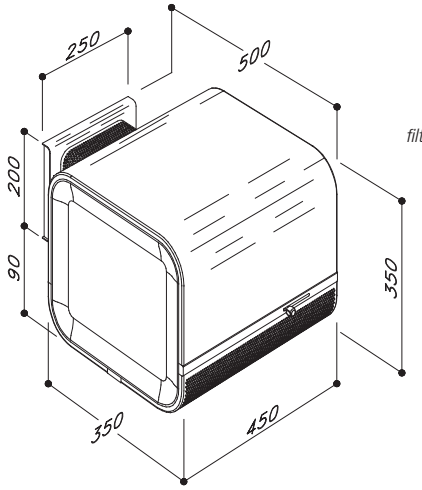

filtering version/back suction

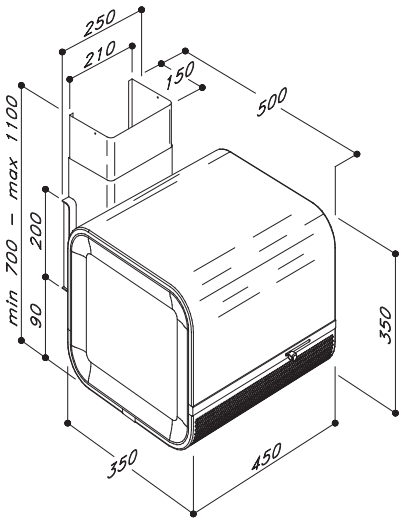

ducting version

SL 88

stainless steel

model identifier	*energetic class*
P088045SL1010158	B

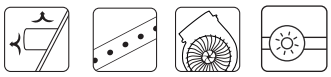

energy label data p. 130

SLTC 92

Sirius design

stainless steel / glass

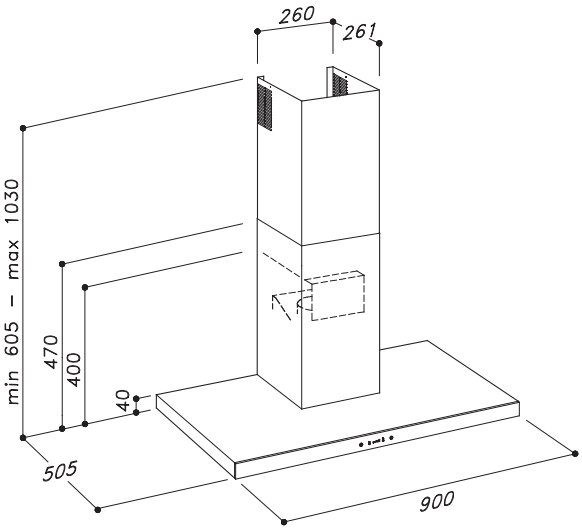

model identifier	*energetic class*
P092090TC1020137	B

energy label data p. 130

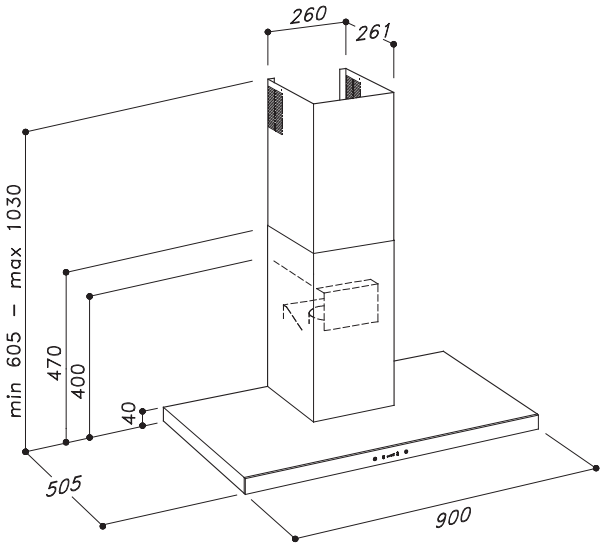

model identifier	*energetic class*
P092090PB1020137	B

SL 92

Sirius design

stainless steel

energy label data p. 130

SLTC 81

Sirius design

stainless steel / glass

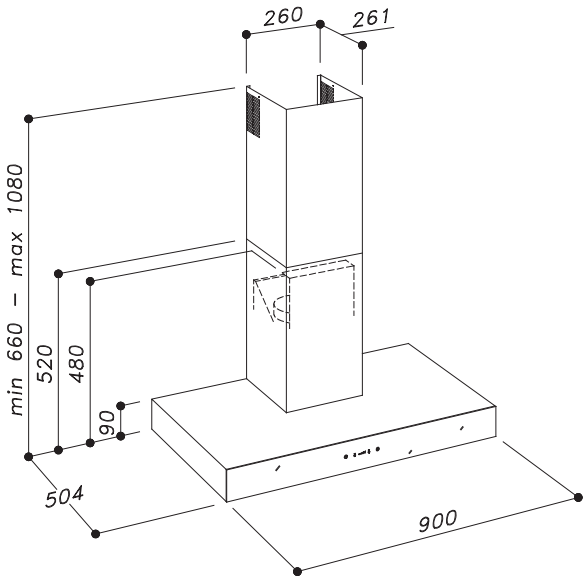

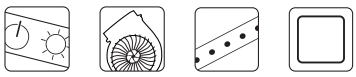

energy label data p. 130

model identifier	*energetic class*
P081090TC1020137	B

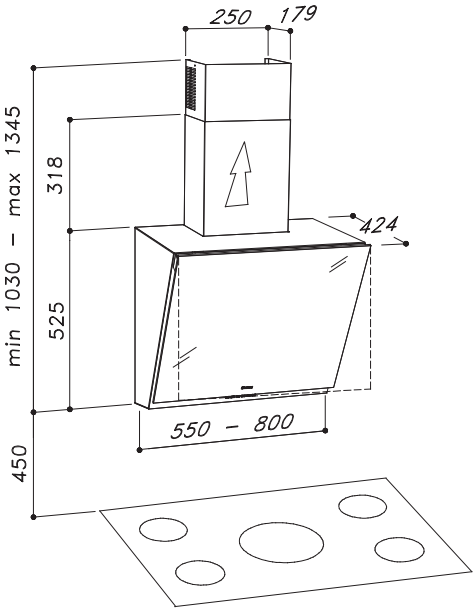

dim. (mm)	model identifier	energetic class
550	P089080PB1020542	A
800	P089055PB1020542	A

SL 89

Sirius design

stainless steel / glass

energy label data p. 130

SL 50

Sirius design

stainless steel

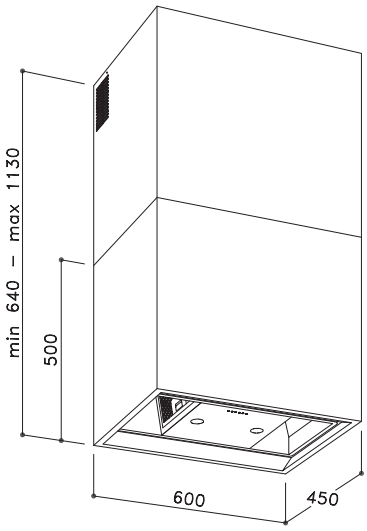

model identifier	*energetic class*
P050060PB1020657	A

energy label data p. 130

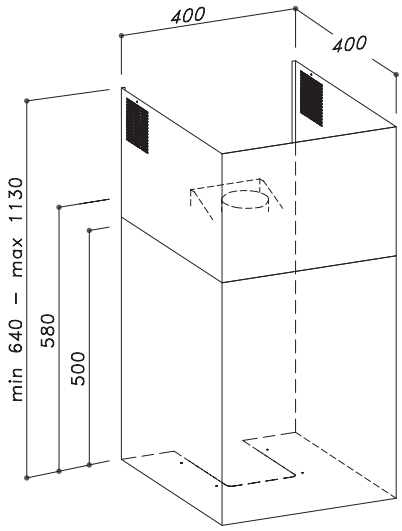

MO 207

Sirius design

stainless steel

	model identifier	*energetic class*
remote control version	P207040RC1020804	B
push button version	P207040PB1020804	B

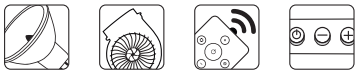

energy label data p. 130

MO 208

Sirius design

stainless steel

energy label data p. 130

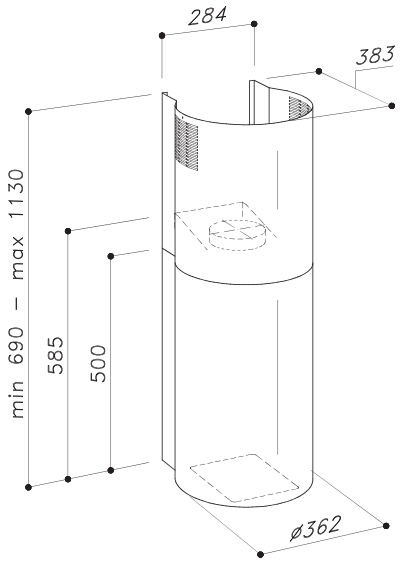

	model identifier	*energetic class*
remote control version	P208036RC1020804	B
push button version	P208036RC1020804	B

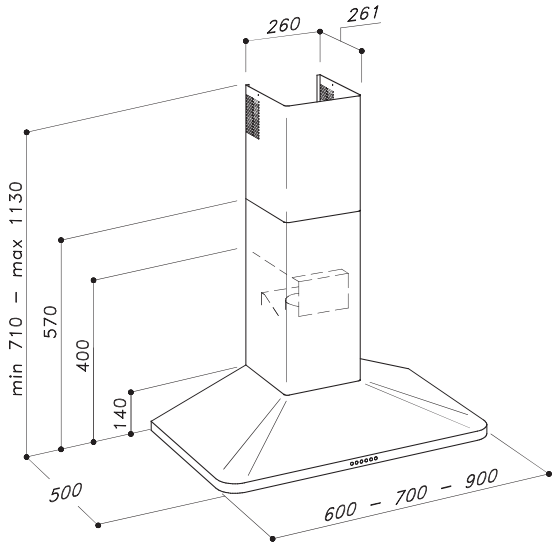

dim. (mm)	model identifier	energetic class
600	P022060PB1020637	A
700	P022070PB1020637	A
900	P022090PB1020637	A

SL 22

Sirius design

stainless steel

energy label data p. 130

SL 26

Sirius design

stainless steel

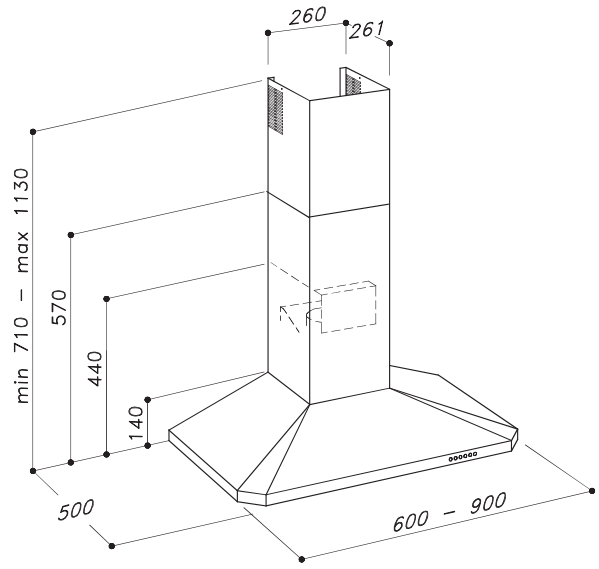

dim. (mm)	model identifier	energetic class
600	P026060PB1020637	A
900	P026090PB1020637	A

energy label data p. 130

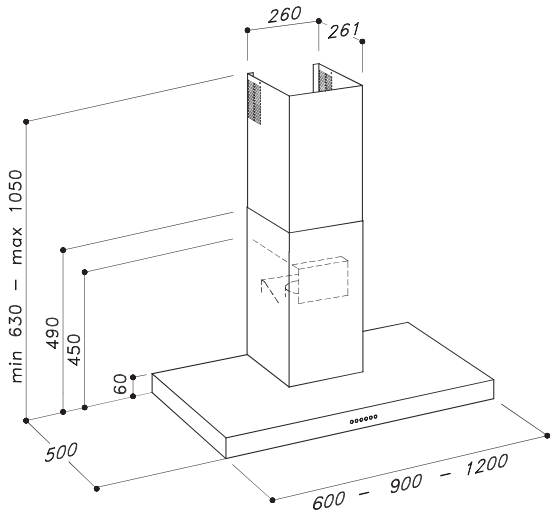

dim. (mm)	external motor	model identifier	energetic class
900	SEM1	P031090PB1140637	B
900	SEM2	P031090PB1150637	B

dim. (mm)	motor on board	model identifier	energetic class
600		P031060PB1020637	A
900		P031090PB1020637	A
1200		P031120PB1020637	A

SL 31

Sirius design

stainless steel

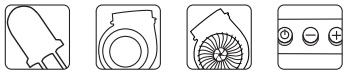

energy label data p. 130

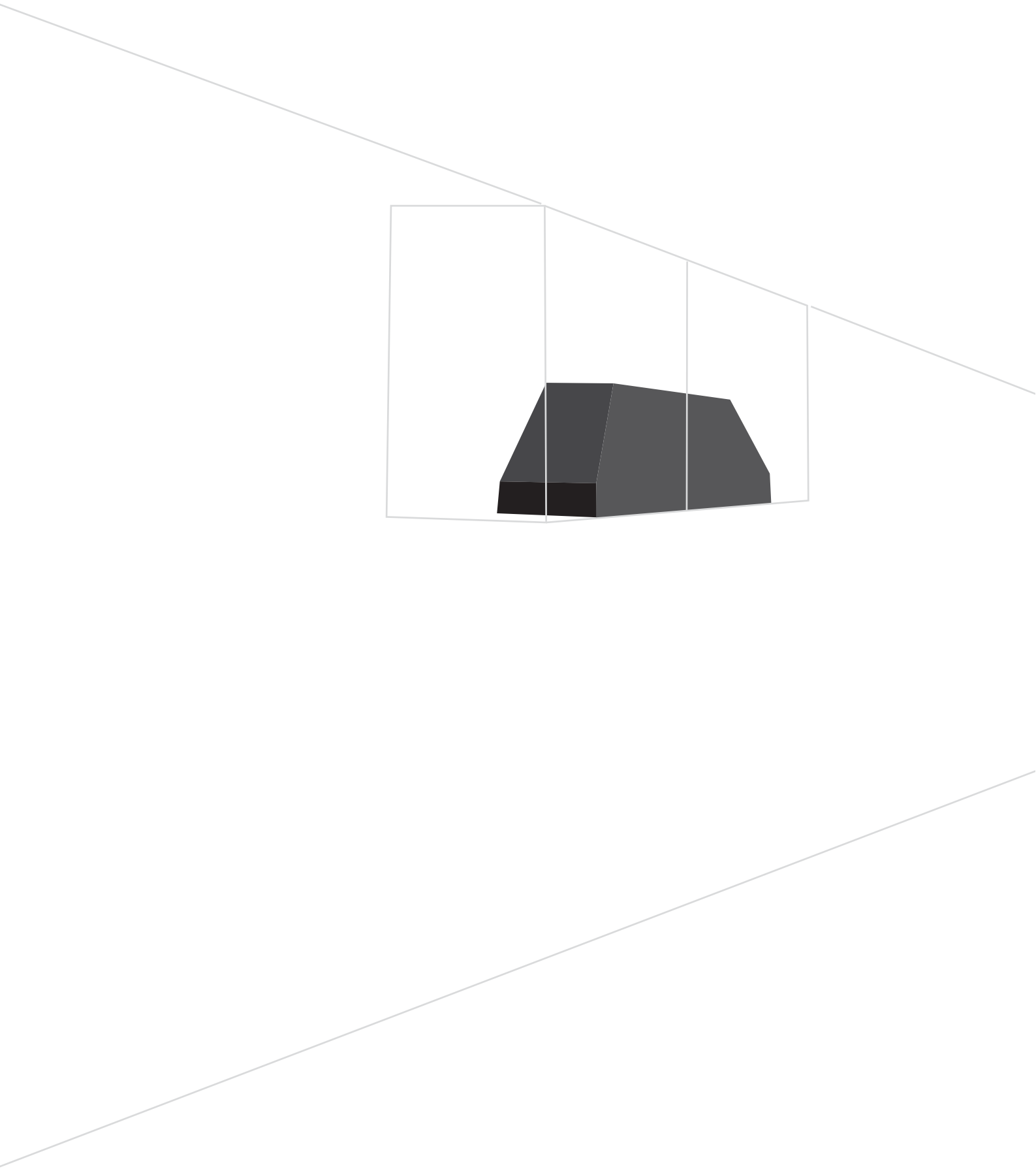

BUILT-IN PRODUCTS

SL 913
SL 914
SL 907
SL 906-L
SL 903
SL 900
SL-SLT-SM 900
SM 905
SL 909
SL 914 WHITE

SL 913

Sirius design

stainless steel / glass

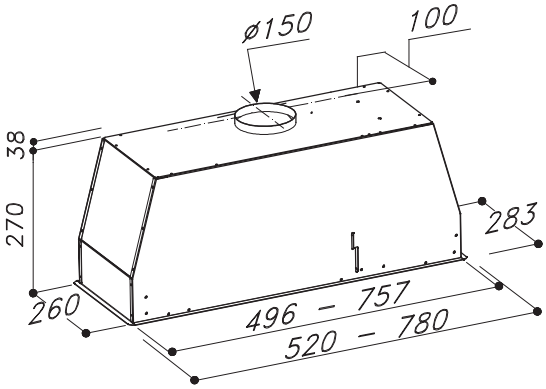

dim. (mm)	*model identifier*	*energetic class*
520	G913052PB1020127	B
780	G913078PB1020227	B

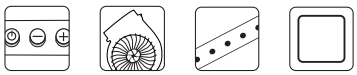

energy label data p. 131

cut out for 520mm: 265x502mm

cut out for 780mm: 265x764mm

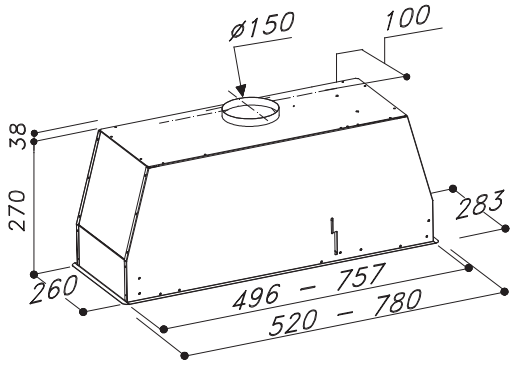

dim. (mm)	model identifier	energetic class
520	G914052PB1020529	B
780	G914078PB1020524	B

SL 914

Sirius design

stainless steel / glass

energy label data p. 131

cut out for 520mm: 265x502mm

cut out for 780mm: 265x764mm

SL 907

Sirius design

stainless steel

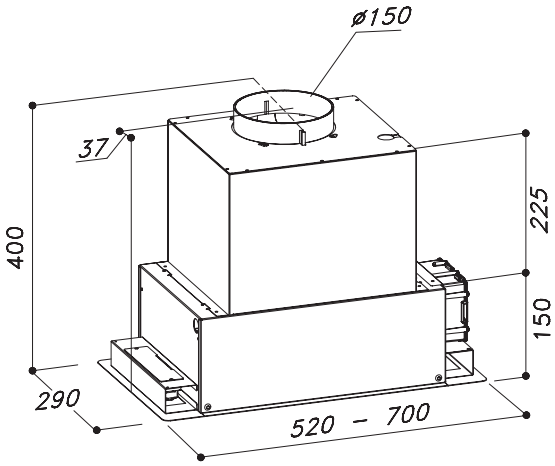

dim. (mm)	model identifier	energetic class
520	G907052PB1021159	B
700	G907070PB1021246	B

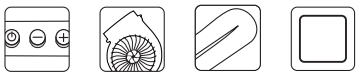

energy label data p. 131

cut out for 520mm: 270x498mm

cut out for 700mm: 270x675mm

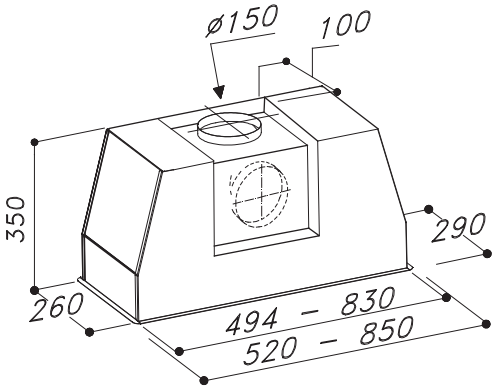

dim. (mm)	model identifier	energetic class
520	G906052PB1020152	B
850	G906085PB1020253	A

SL 906-L

Sirius design

stainless steel

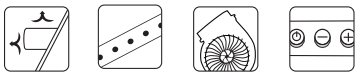

energy label data p. 131

cut out for 520mm: 265x498mm

cut out for 850mm: 265x835mm

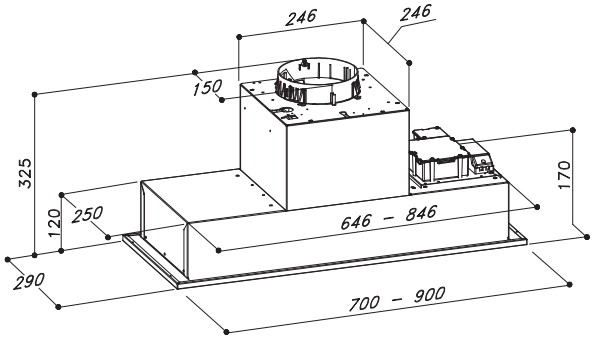

motor on board

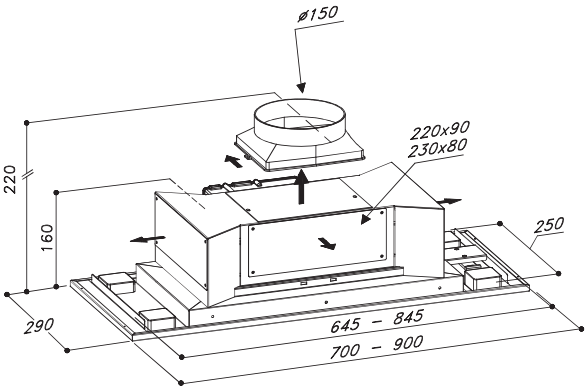

external motor

SL 903

Sirius design

stainless steel

dim. (mm)	*external motor*	*model identifier*	*energetic class*
700	SEM1	G903070PB1140541	B
700	SEM2	G903070PB1150541	C
900	SEM1	G903090PB1140541	B
900	SEM2	G903090PB1150541	C

dim. (mm)	*motor on board*	*model identifier*	*energetic class*
700		G903070PB1020541	B
900		G903090PB1020541	A

energy label data p. 131

cut out *external motor*: for 700mm 255x649mm - for 900mm 255x849mm

cut out *motor on board*: for 700mm 255x649mm - for 900mm 255x849mm

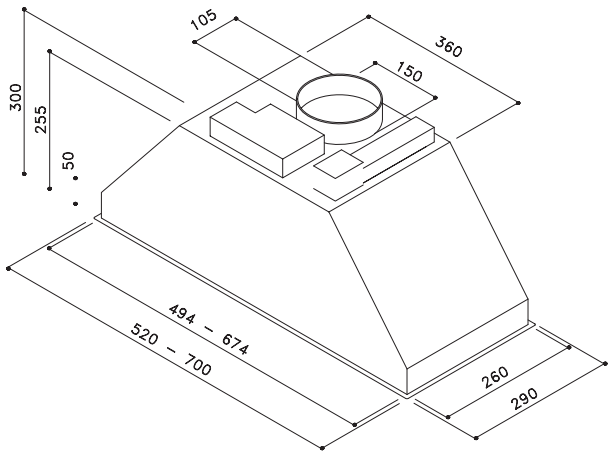

SL - SLT - SM 900

Sirius design

stainless steel

	dim. (mm)	model identifier	energetic class	
SL900	520	G900052PB1020657	A	*push button version*
SLT900	520	G900052RC1020657	A	*remote control version*
SM 900	520	G900052PB1010657	B	*push button version*
SL900	700	G900070PB1020657	A	*push button version*
SLT900	700	G900070RC1020657	A	*remote control version*
SM 900	700	G900070PB1010657	B	*push button version*

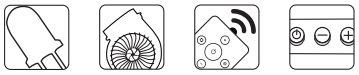

energy label data p. 131

cut out for 520mm: 495x272mm

cut out for 700mm: 675x272mm

SM 905

Sirius design

stainless steel

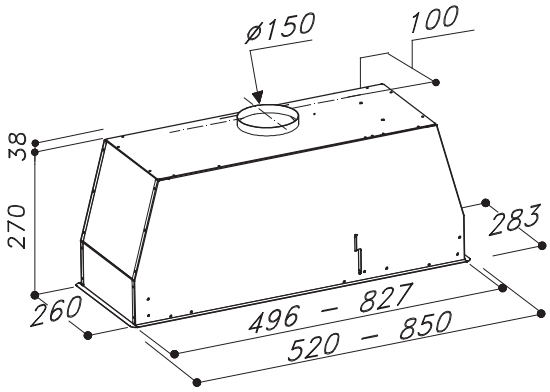

dim. (mm)	*model identifier*	*energetic class*
520	G905052PB1010624	B
850	G905085PB1010624	B

energy label data p. 131

cut out for 520mm: 265x502mm

cut out for 850mm: 265x834mm

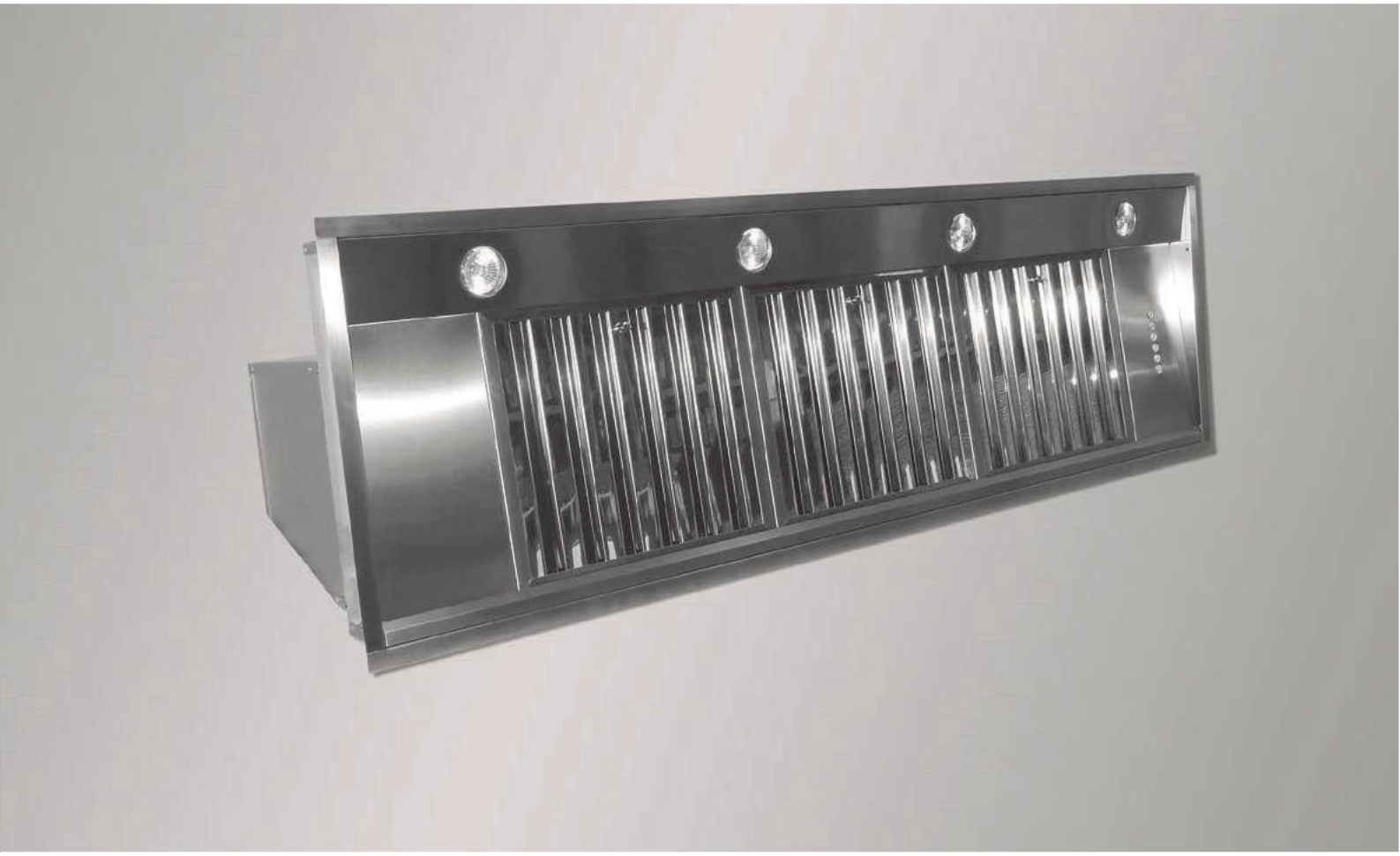

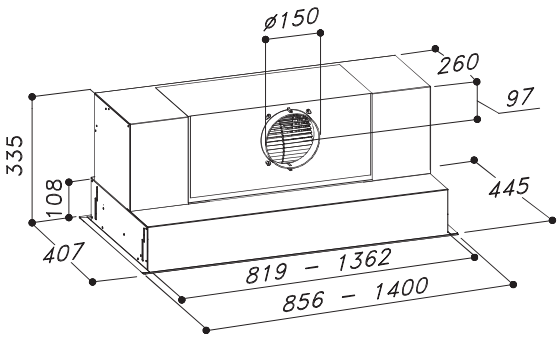

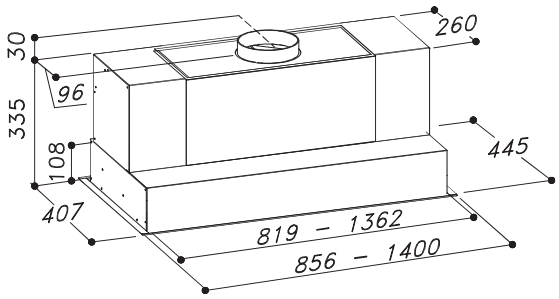

dim. (mm)	model identifier	energetic class
856	G909086PB1021048	B
1400	G909140PB1021048	C

SL 909

Sirius design

stainless steel

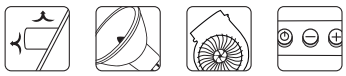

energy label data p. 131

cut out for 856mm: 825x410mm

cut out for 1400mm: 1365x410mm

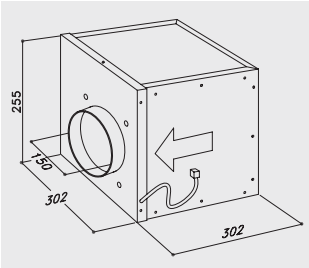

SEM1
air inlet:
Ø 150mm

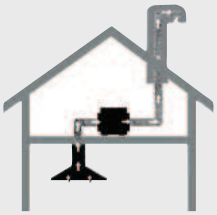

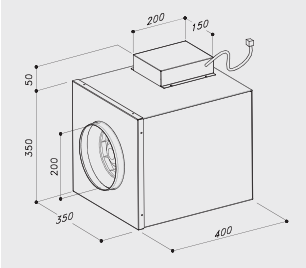

SEM8
air inlet:
Ø 200/150mm

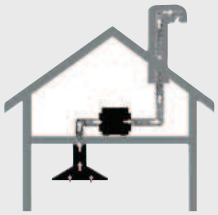

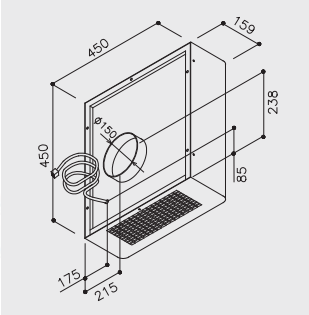

SEM2
air inlet:
Ø 150mm

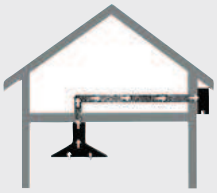

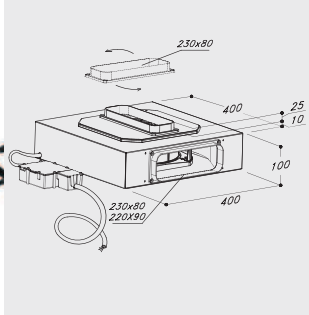

SEM10

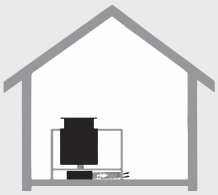

REMOTE MOTORS

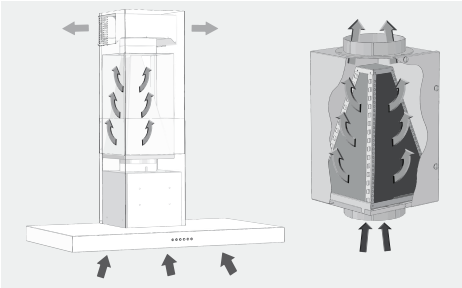

KFHE1 PYRAMID CARBON FILTER HIGH EFFICIENCY

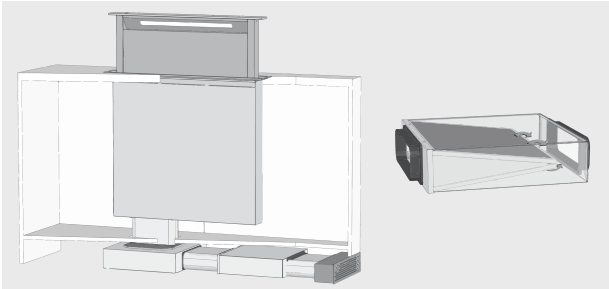

KFHE2 BASE FILTER UNIT HIGH EFFICIENCY FOR DOWNDRAFT

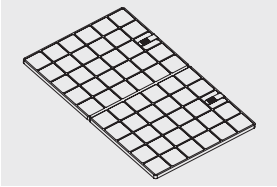

KF
Charcoal filters for use with df when recirculating

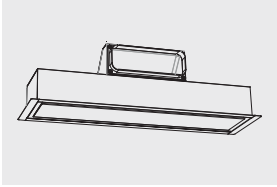

S-DF1*
AIR DEVIATOR FOR USE WITH CEILING HOODS WHEN RECIRCULATING

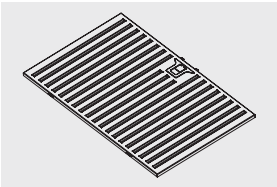

LBR
Stainless steel baffle filter-optional upgrade

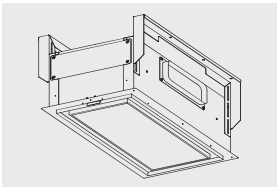

S-DF2*
AIR DEVIATOR FOR USE WITH CEILING HOODS WHEN RECIRCULATING
The air deviator needs to be installed at a minimum distance of 1500mm from the extractor

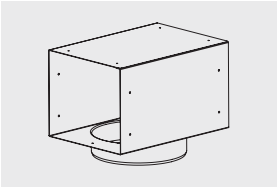

DF
(AIR DEVIATOR FOR USE WITH KF WHEN RECIRCULATING)

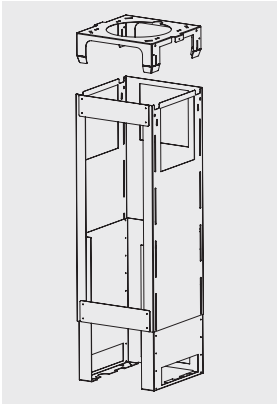

ISLAND FIXING SYSTEM
PATENTED

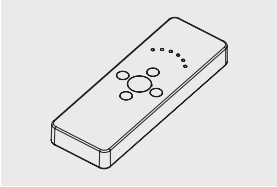

REMOTE CONTROL
(optional)

ACCESSORIES

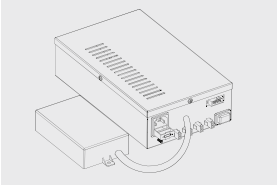

SCET
The remoter motor controller enables to control the external motors (SEM) Sirius in case of special products, wooden made hoods or ventilation systems without using the finished product.

**Cut Out: create a niche of 502mm x 202mm whose minimum height to be reached is 220mm.*

DECORATIVE ISLAND

Product name	Dim.	Motor	Model Identifier	Energy efficiency Class EEI	Annual Energy Consumption AEChood	Fluid Dynamic Efficiency FDE	Light Efficiency Class LE	Grease Filtering Efficiency Class GFE	Weighted Sound Power Emission at maximum speed dB(A)	Air Flow at intensive /boost setting Qmax	Lighting W
SIL 5	900	on-board	I005090PB1020637	A	50,8	A	A	A	70	700	2X2,1
SIL 5	1200	on-board	I005120PB1020637	A	50,6	A	A	A	70	711	2X2,1
SIL-EM 5	900	SEM1	I005090PB1140637	B	54,2	A	A	A	70	676	2X2,1
SIL-EM 5	900	SEM2	I005090PB1150637	B	70,9	B	A	A	70	723	2X2,1
SIL 24	900	on-board	I024090PB1020137	B	60,1	A	B	A	70	760	2X6,5
SIL 24 TC	900	on-board	I024090TC1020137	B	60,1	A	B	A	70	760	2X6,5
MO 404		on-board	I404036RC1020904	B	79,1	A	B	D	71	730	1X40
MO 404 PV		on-board	I404036PB1020904	B	79,1	A	B	D	71	730	1X40
MO 405		on-board	I405040RC1020904	B	79,1	A	B	D	71	730	1X40
MO 405 PO		on-board	I405040PB1020904	B	79,1	A	B	D	71	730	1X40
MO 406		on-board	I406040RC1020857	B	79,1	A	B	D	71	730	1X40

ENERGY LABEL DATA

CEILING HOODS

Product name	Dim.	Motor	Model Identifier	Energy efficiency Class EEI	Annual Energy Consumption AEChood	Fluid Dynamic Efficiency FDE	Light Efficiency Class LE	Grease Filtering Efficiency Class GFE	Weighted Sound Power Emission at maximum speed dB(A)	Air Flow at intensive /boost setting Qmax	Lighting W
SLT 951-EM		SEM1	C951110RC1141037	C	106,6	B	F	F	57	725	4X16
SLT 951-EM		SEM2	C951110RC1151037	C	129,5	B	F	F	61	773	4X16
SLT 951-EM		SEM8	C951110RC1171037	C	138,2	B	F	F	64	869	4X16
SLT 952-EM		SEM1	C952108RC1141413	C	110,3	A	D	F	65	695	6X14
SLT 952-EM		SEM2	C952108RC1151413	C	133,6	B	D	F	71	754	6X14
SLT 952-EM		SEM8	C952108RC1171413	C	153,5	B	D	F	70	865	6X14
SLT 953-EM		SEM1	C953110RC1141037	C	117,5	B	G	F	65	690	4X16
SLT 953-EM		SEM2	C953110RC1151037	C	127,9	B	G	F	71	733	4X16
SLT 953-EM		SEM8	C953110RC1171037	C	147,8	B	G	F	70	832	4X16
SLT 955-EM INOX		SEM1	C955056RC114XX33	B	58,8	A	n/a	F	57	706	no
SLT 955-EM INOX		SEM2	C955056RC115XX33	B	75,5	B	n/a	F	61	708	no
SLT 955-EM INOX		SEM8	C955056RC117XX33	B	91,5	B	n/a	F	64	767	no
SLT 955-EM LIGHT		SEM1	C955056RC1141533	C	89,4	A	D	F	67	706	3X14
SLT 955-EM LIGHT		SEM2	C955056RC1151533	C	106,1	B	D	F	61	708	3X14
SLT 955-EM LIGHT		SEM8	C955056RC1171533	C	122,2	B	D	F	64	767	3X14
SLT 955-EM FOR PANEL		SEM1	C955056RC114XX33	B	58,8	A	n/a	F	57	706	no
SLT 955-EM FOR PANEL		SEM2	C955056RC115XX33	B	75,5	B	n/a	F	61	708	no
SLT 955-EM FOR PANEL		SEM8	C955056RC117XX33	B	91,5	B	n/a	F	64	767	no
SLT 956-EM INOX		SEM1	C956104RC114XX34	B	58,8	A	n/a	F	57	706	no
SLT 956-EM INOX		SEM2	C956104RC115XX34	B	75,5	B	n/a	F	61	708	no
SLT 956-EM INOX		SEM8	C956104RC117XX34	B	91,5	B	n/a	F	64	767	no
SLT 956-EM LIGHT		SEM1	C956104RC1141734	C	89,4	A	D	F	57	706	2x21
SLT 956-EM LIGHT		SEM2	C956104RC1151734	C	106,1	B	D	F	61	708	2x21
SLT 956-EM LIGHT		SEM8	C956104RC1171734	C	122,2	B	D	F	64	767	2x21
SLT 956-EM FOR PANEL		SEM1	C956104RC114XX34	B	58,8	A	n/a	F	57	706	no
SLT 956-EM FOR PANEL		SEM2	C956104RC115XX34	B	75,5	B	n/a	F	61	708	no
SLT 956-EM FOR PANEL		SEM8	C956104RC117XX34	B	91,5	B	n/a	F	64	767	no
SLT 958		on-board	C958090RC1020137	B	59,1	A	B	F	69	745	2x6,5
SLT 958-EM		SEM1	C958090RC1140137	B	68,2	A	B	F	55	725	2x6,5
SLT 958-EM		SEM2	C958090RC1150137	B	87,5	B	B	F	59	790	2x6,5
SLT 958-EM		SEM8	C958090RC1170137	B	96,9	B	B	F	62	900	2x6,5
SLT 958 W		on-board	C958090RC1020137	B	59,1	A	B	F	69	745	2x6,5
SLT 958-EM W		SEM1	C958090RC1140137	B	68,2	A	B	F	55	725	2x6,5
SLT 958-EM W		SEM2	C958090RC1150137	B	87,5	B	B	F	59	790	2x6,5
SLT 958-EM W		SEM8	C958090RC1170137	B	96,9	B	B	F	62	900	2x6,5
SLT 960		on-board	C960110RC1020435	B	77,5	A	E	F	69	747	2x18
SLT 960-EM		SEM1	C960110RC1140435	B	81,6	B	E	F	65	681	2x18
SLT 960-EM		SEM2	C960110RC1150435	C	95,6	B	E	F	71	736	2x18
SLT 960-EM		SEM8	C960110RC1170435	C	117,9	B	E	F	70	855	2x18
SLT 962		on-board	C962090RC1071940	C	69,1	C	E	F	61	552	1x20
SLT 962-EM		SEM1	C962090RC1141940	B	76,6	B	E	F	65	690	1x20
SLT 962-EM		SEM2	C962090RC1151940	C	87	B	E	F	71	733	1x20
SLT 962-EM		SEM8	C962090RC1171940	C	106,9	B	E	F	70	832	1x20
SLT 963		on-board	C963095RC1070324	C	76,4	C	B	F	69	570	2x14,5
SLT 963-EM		SEM1	C963095RC1140324	B	81,7	B	B	F	65	690	2x14,5
SLT 963-EM		SEM2	C963095RC1150324	C	92,1	B	B	F	71	733	2x14,5
SLT 963-EM		SEM8	C963095RC1170324	C	112	B	B	F	70	832	2x14,5

DOWNDRAFT

Product name	Dim.	Motor	Model Identifier	Energy efficiency Class EEI	Annual Energy Consumption AEChood	Fluid Dynamic Efficiency FDE	Light Efficiency Class LE	Grease Filtering Efficiency Class GFE	Weighted Sound Power Emission at maximum speed dB(A)	Air Flow at intensive /boost setting Qmax	Lighting W
S-DD2 INOX	580	on-board	D002058PB102XX07	B	54	B	n/a	E	69	636	no
S-DD2-EM INOX	580	SEM1	D002058PB114XX07	B	56,2	B	n/a	E	66	595	no
S-DD2-EM INOX	580	SEM2	D002058PB115XX07	C	83	C	n/a	E	68	577	no
S-DD2-EM INOX	580	SEM8	D002058PB117XX07	C	101,1	C	n/a	E	70	622	no
S-DD2-EM INOX	580	SEM10	D002058PB119XX07	C	57,0	D	n/a	E	67	435	no
S-DD2 INOX	880	on-board	D002088PB102XX05	A	49,6	A	n/a	E	68	757	no
S-DD2-EM INOX	880	SEM1	D002088PB114XX05	B	56,2	B	n/a	E	59	682	no
S-DD2-EM INOX	880	SEM2	D002088PB115XX05	B	79,3	C	n/a	E	62	731	no
S-DD2-EM INOX	880	SEM8	D002088PB117XX05	C	99	B	n/a	F	64	753	no
S-DD2-EM INOX	880	SEM10	D002088PB119XX05	B	48,4	C	n/a	E	61	520	no
S-DD2 TC	580	on-board	D002058TC102XX07	B	54	B	n/a	E	69	636	no
S-DD2-EM TC	580	SEM1	D002058TC114XX07	B	56,2	B	n/a	E	66	595	no
S-DD2-EM TC	580	SEM2	D002058TC115XX07	C	83	C	n/a	E	68	577	no
S-DD2-EM TC	580	SEM8	D002058TC117XX07	C	101,1	C	n/a	E	70	622	no
S-DD2-EM TC	580	SEM10	D002058TC119XX07	C	57,0	D	n/a	E	67	435	no
S-DD2 TC	880	on-board	D002088TC102XX05	A	49,6	A	n/a	E	68	757	no
S-DD2-EM TC	880	SEM1	D002088TC114XX05	B	56,2	B	n/a	E	59	682	no
S-DD2-EM TC	880	SEM2	D002088TC115XX05	B	79,3	C	n/a	E	62	731	no
S-DD2-EM TC	880	SEM8	D002088TC117XX05	C	99	B	n/a	F	64	753	no
S-DD2-EM TC	880	SEM10	D002088TC119XX05	B	48,4	C	n/a	E	61	520	no
S-DD2-L TC LED	875	on-board	D002088TC1022415	A	53,3	A	A	E	68	757	1x5
S-DD2-L TC EM LED	875	SEM1	D002088TC1142415	B	59,9	B	A	E	59	682	1x5
S-DD2-L TC EM LED	875	SEM2	D002088TC1152415	C	82,9	C	A	E	62	731	1x5
S-DD2-L TC EM LED	875	SEM8	D002088TC1172415	C	102,6	B	A	F	64	753	1x5
S-DD2-L TC EM LED	875	SEM10	D002088TC1192415	C	52,0	C	A	E	61	520	1x5
S-DD2-L TC	575	on-board	D002058TC1021116	B	59,9	B	E	E	69	636	1x8
S-DD2-L-EM TC	575	SEM1	D002058TC1141116	B	62,1	B	E	E	66	595	1x8
S-DD2-L-EM TC	575	SEM2	D002058TC1151116	C	88,9	C	E	E	68	577	1x8
S-DD2-L-EM TC	575	SEM8	D002058TC1171116	C	106,9	C	E	E	70	622	1x8
S-DD2-L-EM TC	575	SEM10	D002058TC1191116	C	62,9	D	E	E	67	435	1x8
S-DD2-L TC	875	on-board	D002088TC1021415	B	59,8	A	E	E	68	757	1x14
S-DD2-L-EM TC	875	SEM1	D002088TC1141415	B	66,4	B	E	E	59	682	1x14
S-DD2-L-EM TC	875	SEM2	D002088TC1151415	C	89,5	C	E	E	62	731	1x14
S-DD2-L-EM TC	875	SEM8	D002088TC1171415	C	109,2	B	E	F	64	753	1x14
S-DD2-L-EM TC	875	SEM10	D002088TC1191415	C	58,6	C	E	E	61	520	1x14
S-DD2-L TC	1175	on-board	D002118TC1021317	B	65,6	A	F	E	65	791	1x21
S-DD2-L-EM TC	1175	SEM1	D002118TC1141317	B	65,6	A	F	E	55	736	1x21
S-DD2-L-EM TC	1175	SEM2	D002118TC1151317	C	99,4	B	F	E	57	738	1x21
S-DD2-L-EM TC	1175	SEM8	D002118TC1171317	C	107,3	B	F	E	60	807	1x21
S-DD2-L-EM TC	1175	SEM10	D002118TC1191317	C	64,3	C	F	E	59	559	1x21
S-DD2-L INOX LED	875	on-board	D002088PB1022415	A	53,3	A	A	E	68	757	1x5
S-DD2-L INOX EM LED	875	SEM1	D002088PB1142415	B	59,9	B	A	E	59	682	1x5
S-DD2-L INOX EM LED	875	SEM2	D002088PB1152415	C	82,9	C	A	E	62	731	1x5
S-DD2-L INOX EM LED	875	SEM8	D002088PB1172415	C	102,6	B	A	F	64	753	1x5
S-DD2-L INOX EM LED	875	SEM10	D002088PB1192415	C	52,0	C	A	E	61	520	1x5

Product name	Dim.	Motor	Model Identifier	Energy efficiency Class EEI	Annual Energy Consumption AEChood	Fluid Dynamic Efficiency FDE	Light Efficiency Class LE	Grease Filtering Efficiency Class GFE	Weighted Sound Power Emission at maximum speed dB(A)	Air Flow at intensive /boost setting Qmax	Lighting W
S-DD2-L-INOX	575	on-board	D002058PB1021116	B	59,9	B	E	E	69	636	1x8
S-DD2-L-EM INOX	575	SEM1	D002058PB1141116	B	62,1	B	E	E	66	595	1x8
S-DD2-L-EM INOX	575	SEM2	D002058PB1151116	C	88,9	C	E	E	68	577	1x8
S-DD2-L-EM INOX	575	SEM8	D002058PB1171116	C	106,9	C	E	E	70	622	1x8
S-DD2-L-EM INOX	575	SEM10	D002058PB1191116	C	62,9	D	E	E	67	435	1x8
S-DD2-L-INOX	875	on-board	D002088PB1021415	B	59,8	A	E	E	68	757	1x14
S-DD2-L-EM INOX	875	SEM1	D002088PB1141415	B	66,4	B	E	E	59	682	1x14
S-DD2-L-EM INOX	875	SEM2	D002088PB1151415	C	89,5	C	E	E	62	731	1x14
S-DD2-L-EM INOX	875	SEM8	D002088PB1171415	C	109,2	B	E	F	64	753	1x14
S-DD2-L-EM INOX	875	SEM10	D002088PB1191415	C	58,6	C	E	E	61	520	1x14
S-DD2-L-INOX	1175	on-board	D002118PB1021317	B	65,6	A	F	E	65	791	1x21
S-DD2-L-EM INOX	1175	SEM1	D002118PB1141317	B	65,6	A	F	E	55	736	1x21
S-DD2-L-EM INOX	1175	SEM2	D002118PB1151317	C	99,4	B	F	E	57	738	1x21
S-DD2-L-EM INOX	1175	SEM8	D002118PB1171317	C	107,3	B	F	E	60	807	1x21
S-DD2-L-EM INOX	1175	SEM10	D002118PB1191317	C	64,3	C	F	E	59	559	1x21
S-DD3 TC	520	on-board	D003052TC102XX07	B	54	B	n/a	E	69	636	no
S-DD3-EM TC	520	SEM1	D003052TC114XX07	B	56,2	B	n/a	E	66	595	no
S-DD3-EM TC	520	SEM2	D003052TC115XX07	C	83	C	n/a	E	68	577	no
S-DD3-EM TC	520	SEM8	D003052TC117XX07	C	101,1	C	n/a	E	70	622	no
S-DD3-EM TC	520	SEM10	D003052TC119XX07	C	57,0	D	n/a	E	67	435	no
S-DD4 TC	880	on-board	D004088TC1021415	B	59,8	A	E	E	68	757	1x14
S-DD4-EM TC	880	SEM1	D004088TC1141415	B	66,4	B	E	E	59	682	1x14
S-DD4-EM TC	880	SEM2	D004088TC1151415	C	89,5	C	E	E	62	731	1x14
S-DD4-EM TC	880	SEM8	D004088TC1171415	C	109,2	B	E	F	64	753	1x14
S-DD4-EM TC	880	SEM10	D004088TC1191415	C	58,6	C	E	E	61	520	1x14
S-DD8-L TC	870	on-board	D008087TC1020223	A	54,9	A	A	E	68	705	1x10,5
S-DD8-L-EM TC	870	SEM1	D008087TC1140223	B	66,4	B	E	E	59	682	1x10,5
S-DD8-L-EM TC	870	SEM2	D008087TC1150223	C	89,5	C	E	E	62	731	1x10,5
S-DD8-L-EM TC	870	SEM8	D008087TC1170223	C	109,2	B	E	F	64	753	1x10,5
S-DD8-L-EM TC	870	SEM10	D008087TC1190223	C	58,6	C	E	E	61	520	1x10,5
S-DD11	810	on-board	D011088PB1022219	B	56,8	B	E	E	68	668	2x3,9
S-DD11 EM	810	SEM1	D011088PB1142219	B	52,6	B	E	E	59	625	2x3,9
S-DD11 EM	810	SEM2	D011088PB1152219	B	77,3	C	E	E	62	639	2x3,9
S-DD12 TC	870	on-board	D012088TC1022339	B	60,3	A	E	E	68	752	1x12
S-DD12 EM TC	870	SEM1	D012088TC1142339	B	60,2	A	E	E	59	665	1x12
S-DD12 EM TC	870	SEM2	D012088TC1152339	B	79,4	B	E	E	62	718	1x12
S-DD12 EM TC	870	SEM8	D012088TC1172339	B	97,9	B	E	F	64	816	1x12
S-DD12 EM TC	870	SEM10	D012088TC1192339	C	58,6	C	E	E	61	520	1x12
UPRIGHT BUILT-IN	872	on-board	U001087RC1110256	C	46,7	D	A	F	68	496	1x10,5
UPRIGHT-EM BUILT-IN	872	SEM1	U001087RC1140256	B	59,8	A	A	F	59	708	1x10,5
UPRIGHT-EM BUILT-IN	872	SEM2	U001087RC1150256	B	77,5	B	A	F	62	763	1x10,5
UPRIGHT TC GLASS-INOX	893	on-board	U002090TC1110256	C	46,7	D	A	F	68	496	1x10,5
UPRIGHT-EM TC GLASS/INOX	893	SEM1	U002090TC1140256	B	59,8	A	A	F	59	708	1x10,5
UPRIGHT-EM TC GLASS/INOX	893	SEM2	U002090TC1150256	B	77,5	B	A	F	62	763	1x10,5

WALL HOODS

Product name	Dim.	Motor	Model Identifier	Energy efficiency Class EEI	Annual Energy Consumption AEChood	Fluid Dynamic Efficiency FDE	Light Efficiency Class LE	Grease Filtering Efficiency Class GFE	Weighted Sound Power Emission at maximum speed dB(A)	Air Flow at intensive /boost setting Qmax	Lighting W
SL 22	600	on-board	P022060PB1020637	A	52	A	A	A	72	712	2X2,1
SL 22	700	on-board	P022070PB1020637	A	52	A	A	A	72	712	2X2,1
SL 22	900	on-board	P022090PB1020637	A	52	A	A	A	72	712	2X2,1
SL 26	600	on-board	P026060PB1020637	A	52	A	A	A	72	712	2X2,1
SL 26	900	on-board	P026090PB1020637	A	52	A	A	A	72	712	2X2,1
SL 31	600	on-board	P031060PB1020637	A	52	A	A	A	72	712	2X2,1
SL 31	900	on-board	P031090PB1020637	A	50,8	A	A	B	72	700	2X2,1
SL 31	1200	on-board	P031120PB1020637	A	50,6	A	A	A	72	711	2X2,1
SL 31-EM	900	SEM1	P031090PB1140637	B	54,2	A	A	A	72	676	2X2,1
SL 31-EM	900	SEM2	P031090PB1150637	B	70,9	B	A	A	72	685	2X2,1
SL 50	600	on-board	P050060PB1020657	A	53,7	A	A	B	70	743	2X2,1
SLTC 74	900	on-board	P074090TC1020720	A	63,7	A	E	D	71	766	3X1,2
SLTR 75	600	on-board	P075060RB1010121	B	63,6	B	B	D	71	647	1X6,5
SLTR 75	900	on-board	P075090RB1020220	A	58,5	A	B	D	71	766	1X10,5
SLTC 75	600	on-board	P075060TC1010121	B	63,6	B	B	D	71	647	1X6,5
SLTC 75	900	on-board	P075090TC1020220	A	58,5	A	B	D	71	766	1X10,5
SLTC 81	900	on-board	P081090TC1020137	B	57,2	A	B	B	72	700	2X6,5
SLTC 85	900	on-board	P085090TC1020137	B	63,2	B	B	C	72	586	2X6,5
SLTC 86	800	on-board	P086080TC1010157	B	58,1	B	A	D	71	604	2X6,5
SLTC 87	800	on-board	P087080TC1020137	B	63,2	B	B	C	72	586	2X6,5
SL 88	450	on-board	P088045SL1010158	B	65,3	B	A	B	71	645	1X6,5
SL 89	800	on-board	P089055PB1020542	A	55,3	A	A	E	69	707	2X2,1
SL 89	550	on-board	P089080PB1020542	A	55,3	A	A	E	69	707	2X2,1
SL 90	550	on-board	P090055SL1020113	A	57	A	B	C	69	707	1X6,5
SL 90	550	on-board	P090055SL1020113	A	57	A	B	C	69	707	1X6,5
SL 91	800	on-board	P091080SL1020122	A	57	A	B	D	69	707	1X6,5
SL 91	800	on-board	P091080SL1020122	A	57	A	B	D	69	707	1X6,5
SLTC 92	900	on-board	P092090TC1020137	B	58,8	A	B	A	72	700	2X6,5
SL 92	900	on-board	P092090PB1020137	B	58,8	A	B	A	72	700	2X6,5
SLTC 93	800	on-board	P093080TC1020122	A	57	A	B	C	69	707	1X6,5
SLTC94	800	on-board	P094080TC1020113	A	57	A	B	D	69	707	1X6,5
SLTC95	670	on-board	P095067TC1020118	A	57,7	A	B	B	69	753	1X6,5
SL96	700	on-board	P096070PB1012018	B	61,6	B	B	B	71	625	2x3
SLTC97	900	on-board	P097090TC1020102	B	58,8	A	B	A	72	700	2X6,5
MO 207		on-board	P207040RC1020804	B	79,1	A	B	D	71	730	1x40
MO 207 PO		on-board	P207040PB1020804	B	79,1	A	B	D	71	730	1x40
MO 208		on-board	P208036RC1020804	B	79,1	A	B	D	71	730	1x40
MO 208 PV		on-board	P208036PB1020804	B	79,1	A	B	D	71	730	1x40

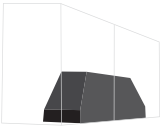

BUILT-IN PRODUCTS

Product name	Dim.	Motor	Model Identifier	Energy efficiency Class EEI	Annual Energy Consumption AEChood	Fluid Dynamic Efficiency FDE	Light Efficiency Class LE	Grease Filtering Efficiency Class GFE	Weighted Sound Power Emission at maximum speed dB(A)	Air Flow at intensive /boost setting Qmax	Lighting W
SM 900	520	on-board	G900052PB1010657	B	58,1	B	A	B	70	604	2X2,1
SL 900	520	on-board	G900052PB1020657	A	53,7	A	A	B	70	743	2X2,1
SM 900	700	on-board	G900070PB1010657	B	54,9	B	A	B	70	654	2X2,1
SL 900	700	on-board	G900070PB1020657	A	48,3	A	A	B	70	792	2X2,1
SLT 900	520	on-board	G900052RC1020657	A	53,7	A	A	B	70	743	2X2,1
SLT 900	700	on-board	G900070RC1020657	A	48,3	A	A	B	70	792	2X2,1
SM 905	520	on-board	G905052PB1010624	B	58,1	B	A	B	70	604	2X2,1
SM 905	850	on-board	G905085PB1010624	B	54,9	B	A	B	70	654	2X2,1
SL 903-P	700	on-board	G903070PB1020541	B	58,3	A	A	B	69	697	4X2,1
SL 903-P-EM	700	SEM1	G903070PB1140541	B	58,1	B	A	B	65	630	4X2,1
SL 903-P-EM	700	SEM2	G903070PB1150541	C	80,2	C	A	B	66	630	4X2,1
SL 903-P	900	on-board	G903090PB1020541	A	52,8	A	A	B	69	705	4X2,1
SL 903-P-EM	900	SEM1	G903090PB1140541	B	58,5	B	A	B	65	624	4X2,1
SL 903-P-EM	900	SEM2	G903090PB1150541	C	81,1	C	A	B	66	632	4X2,1
SL 906-L	520	on-board	G906052PB1020152	B	55,8	B	A	A	71	654	1x6,5
SL 906-L	850	on-board	G906085PB1020253	A	56,8	A	B	A	71	726	1x10,5
SL 907	520	on-board	G907052PB1021159	B	62,7	B	D	B	69	635	2x8
SL 907	700	on-board	G907070PB1021246	B	75,6	B	F	B	69	692	2x15
SL 909	856	on-board	G909086PB1021048	B	72,5	A	E	A	71	726	2x16
SL 909	1400	on-board	G909140PB1021048	C	98,2	A	F	A	71	737	4x16
SL 913	520	on-board	G913052PB1020127	B	57,3	B	D	B	69	641	1x6,5
SL 913	780	on-board	G913078PB1020227	B	62,6	A	E	B	69	712	1x10,5
SL 914	520	on-board	G914052PB1020529	B	55,6	B	A	B	69	641	2x2,1
SL 914	780	on-board	G914078PB1020524	B	58	A	A	B	69	712	2x2,1

CONTROL SYSTEM

- TOUCH CONTROL
- REMOTE CONTROL
- CONTROL UNIT
- ROUND KNOB
- PERIMETER SUCTION
- SLIDER
- SPEED INDICATOR

MOTORS

- ON BOARD MOTOR
- EXTERNAL MOTOR
- AIRFLOW BACK/UP SUCTION

LIGHTING

- LED STRIP
- NEON
- DICHROIC LAMP
- LED

COLORS

- PURE WHITE PAINTED
- PLATINUM PAINTED
- STAINLES STEEL
- LIGHT GREEN PAINTED
- LIGHT PINK PAINTED
- RED PAINTED
- GOLD PAINTED
- COPPER PAINTED
- GRAPHITE BLACK PAINTED

TECHNICAL DATA

art direction and concept
Giacomo Fava

graphic editing
Raffaela Guerci

rendering
Arteconi CGI
Carlo De Maria

print
Artelito

january 2015

The printing process do not always permit a faithful reproduction of tones and materials of originals.

Sirius S.p.A. reserves the right to change, at any time and without prior warning, the technical specifications of any product illustrated in this catalogue.

This catalogue is of exlusive propriety of Sirius spa. All rights are reserved. Any form of total or partial reproduction of catalogue is stricty forbidden.

SIRIUS S.p.a.
Zona Ind.le Berbentina 6/A
60041 Sassoferrato (An)
Tel. +39 0732.97171
Fax. +39 0732.95493

www.siriuscappe.com

cod. 99000000015

www.siriuscappe.com